Copyright FCI.

FCIconnect.com

PRODUCT NUMBER	PITCH
YHxx21x100J0G	5.08 mm

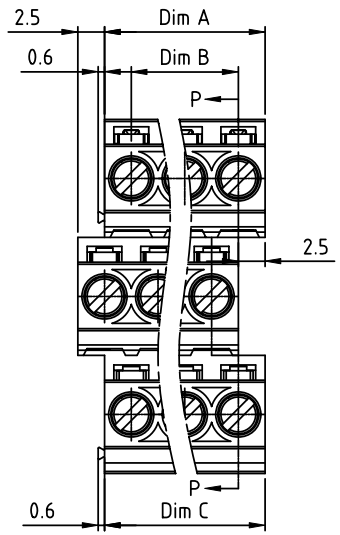

DIMENSION

Dim A	N/3x5.08
Dim B	(N/3-1)x5.08
Dim C	N/3x5.08

N=Number of poles

Poles	Tolerance
3×2poles~3×6poles	±0.15
3×7poles~3×12poles	±0.25
3×13poles~3×18poles	±0.35
3×19poles~3×24poles	±0.40

PART NO.: YH xx 21 x 1 00J0 G

End stackable
No. of poles
06 3×2poles
09 3×3poles
... ...
72 3×24poles

Color
0 Black (RAL9005)
2 Red (RAL3001/D)
3 Orange(RAL2011/P)
4 Yellow(RAL1018/A)
5 Green(RAL6018/T)
6 Blue (RAL5015/A)
8 Grey(RAL7035/D)
9 White(RAL1102)
C Green(RAL6018/U)

RoHS compliant
(lead<4%)
In copper Alloy

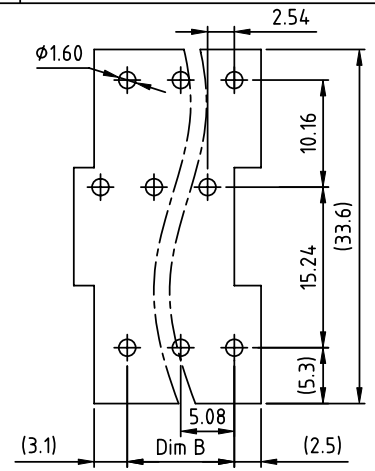

RECOMMENDED P.C.B LAYOUT
TOP VIEW

Material

- Item ⓐ Terminal screw: Steel Zinc plating "-" slot type
- Item ⓑ Clamp : Brass , Ni plating
- Item ⓒ Terminal housing : Thermoplastic (UL94V-0)
- Item ⓓ Solder pin1 : Brass,Tin plated
- Item ⓔ Solder pin2 : Brass,Tin plated
- Item ⓕ Solder pin3 : Brass,Tin plated

Electrical cULus

- Voltage rating: 300VAC
- Current rating: 20A
- Wire range:
- Solid wire(AWG): 12-28
- Stranded wire(AWG): 12-28
- Torque(Lb-In): 4.3
- Screw: M3
- Wire strip length: 6-7mm
- Withstanding Voltage: 1.6KV
- Operating temperature: -40°C to +115°C
- Soldering temperature: 260°C±5°C/5 Sec
- Safety Approval: c UL us

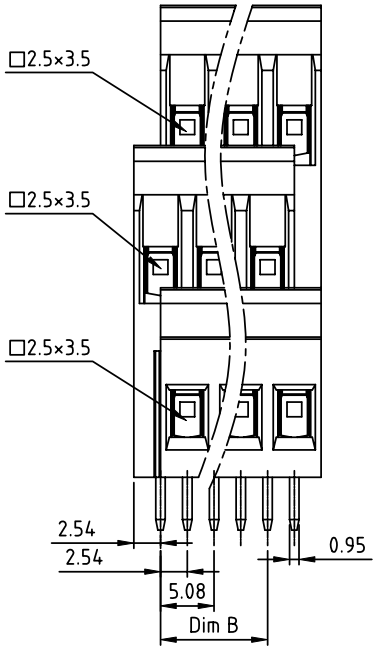

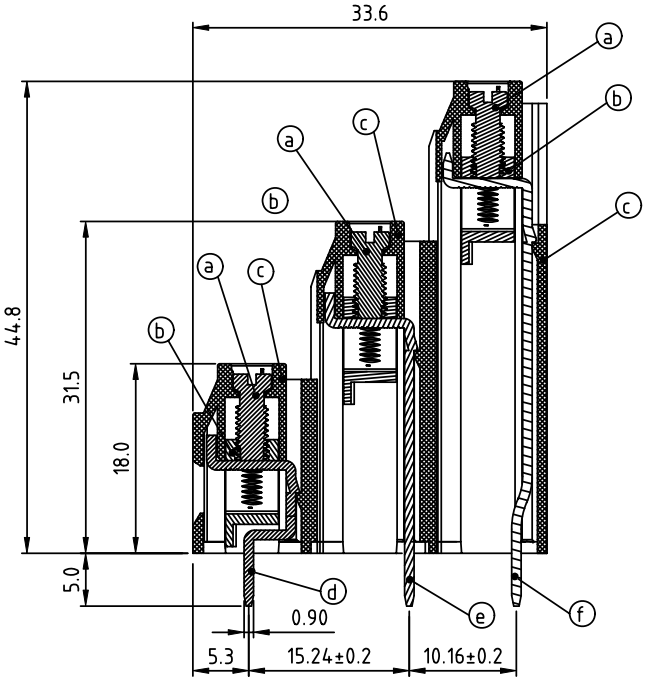

SECTION P-P

mat'l. code				surface ASME Y14.5	tolerance ASME Y14.5	projection	product family TERMINAL BLOCK
ltr	ecn no	dr	date	tolerances unless otherwise specified			title TERMINAL BLOCK
				angles	linear X.±0.5 / X.X±0.3 / X.XX±0.1	MM	RISING CLAMP,180D WIRE INLET,END STACKABLE
				X°±1°		scale	
				dr EVIN ZHONG 041114		FCI	dwg no YHxx21x100J0G sheet 1 of 1 size A4
				engr EVIN ZHONG 041114			
				chr HANKE FENG 041114			
				appd SHI JUN 041114			type CUSTOMER Drawing
sheet index	revision	A					
	sheet	1					