NOTES:

1) MATERIAL:
   HOUSING: LCP, UL94 V-0, COLOR: BLACK
   TERMINALS: BRASS
2) TERMINAL FINISH:
   .000100/(.00254) MIN. MATTE TIN OVER
   .000050/(.00127) MIN. NICKEL OVERALL.
3) PRODUCT SPECIFICATION: PS-45558-001
4) PACKAGING: PER PK-5569-002
5) PARTS MATE WITH MINI-FIT JR. RECEPTACLE 455590002.
6) FULL RIB INDICATES CIRCUIT NO. 1.
7) FORMING MARKS ON PINS ARE ACCEPTABLE
8) PARTS ARE NOT TO BE MATED OR UNMATED WHILE CIRCUITS ARE LIVE.
9) PEGS ARE DESIGNED FOR A PRESS FIT INTO THE P.C. BOARD.
10) PARTS ARE NOT DESIGNED FOR CURRENT SHARING.
11) DISCOLORATION IN THE BANDOLIER CARRIER AREA OF THE PIN IS INHERENT TO THE PLATING PROCESS AND IS DUE TO THE MASKING EFFECT OF THE CARRIER. THIS DISCOLORATION IS IN A NON-FUNCTIONAL AREA OF THE PIN AND WILL NOT AFFECT THE PERFORMANCE OF THE HEADER ASSEMBLY.
12) PART CONFORMS TO CLASS "B" REQUIREMENTS OF COSMETIC SPECIFICATION PS-45499-002.

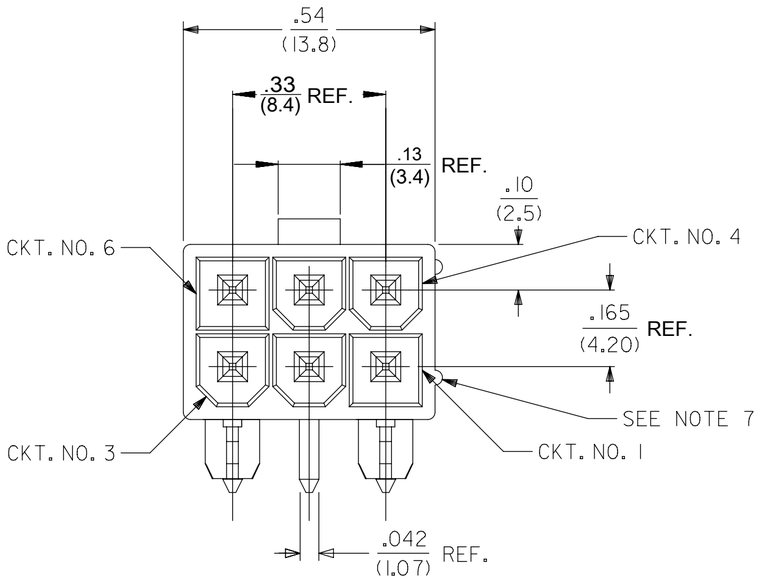

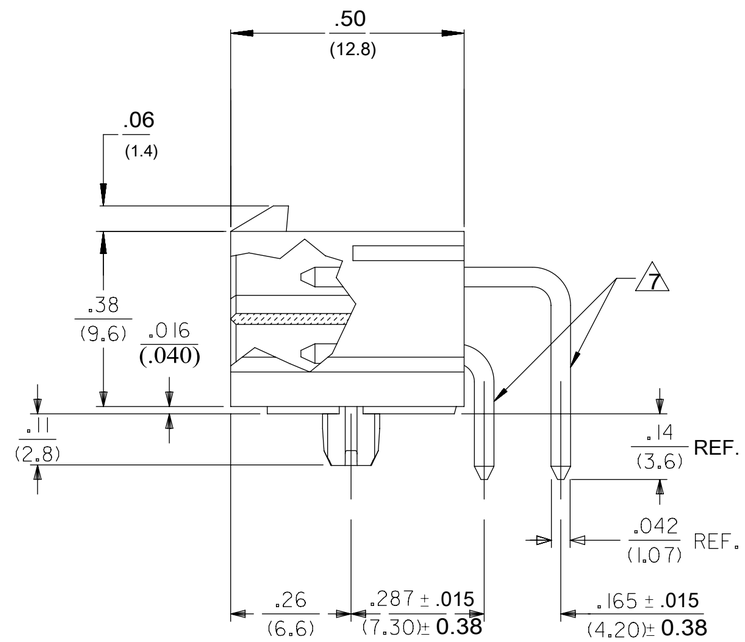

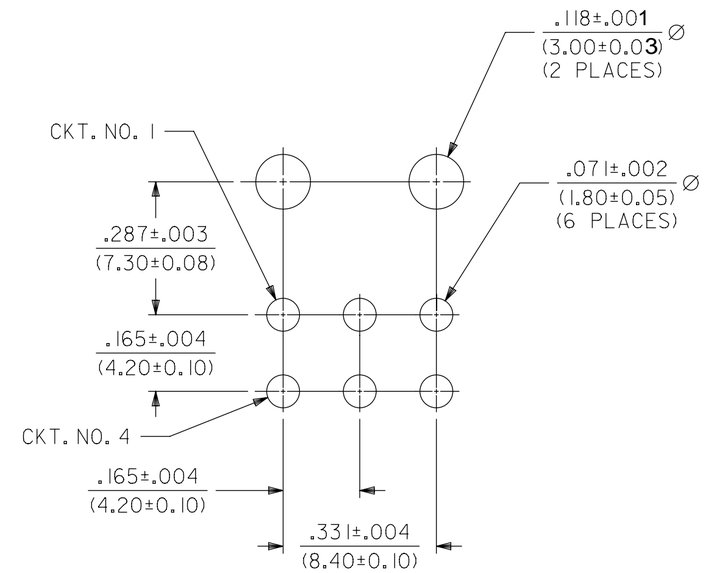

RECOMMENDED HOLE LAYOUT FOR
.070/(1.78) MAX. THICK P.C. BOARD.
VIEWED FROM COMPONENT SIDE OF BOARD.

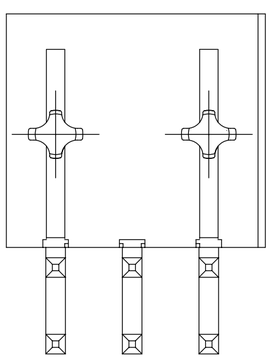

QUALITY SYMBOLS	
FA	= 0
FC	= 0
FP	= 0
▼	= 0
C	= 0
☒	= 0
■	= 0
▽	= 0

THIS DRAWING CONTAINS INFORMATION THAT IS PROPRIETARY TO MOLEX ELECTRONIC TECHNOLOGIES, LLC AND SHOULD NOT BE USED WITHOUT WRITTEN PERMISSION

ADD TOLERANCES
EC NO: 103343 2016/03/14
DRWN: CSLAFTER 2016/03/22
CHK'D: JBELL 2016/03/30
APPR: FSMITH

GENERAL TOLERANCES (UNLESS SPECIFIED)

	MM	INCH
4 PLACES	±	±
3 PLACES	±	± .010
2 PLACES	± 0.25	± .015
1 PLACES	± 0.38	±
0 PLACES	±	±

ANGULAR TOL ± 1/2

DRAFT WHERE APPLICABLE MUST REMAIN WITHIN DIMENSIONS

REV B1

DIMENSION UNITS	SCALE
IN/MM	4:1
DRWN BY: GEP	DATE: 2005/03/12
CHK'D BY: YLM	DATE: 2005/03/12
APPR BY: FSMITH	DATE: 2012/02/02
DRAWING SIZE: C	THIRD ANGLE PROJECTION

molex®

6 CKT. RT AN HDR ASSY.
SPECIAL POLARIZATION MINI-FIT JR. SERIES

PRODUCT CUSTOMER DRAWING

SERIES	MATERIAL NUMBER	CUSTOMER
45732	457320001	GENERAL MARKET

DOCUMENT NUMBER	DOC TYPE	DOC PART	SHEET NUMBER
SD-45732-001	PSD	000	1 OF 1

RELEASE STATUS		RELEASE DATE	22:55:59

FORMAT: Eng-tega-master-tb-prod-C
REVISION: B
DATE: 2015/11/19