Signal Multiplier
MCR-FL-C-UI-2UI-DCI

1. Description

- 4-way isolation
- Configurable inputs and outputs
  Signal conversion and amplification
- Adjustable signal combinations
- 17.5 mm ME housing

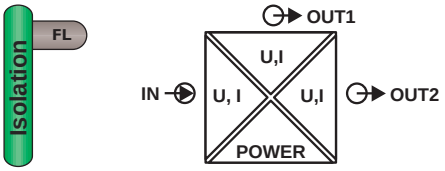

The MCR-FL-C-UI-2UI-DCI signal multiplier is used to multiply and electrically isolate analog signals.

The module inputs, outputs, and the power supply are electrically isolated from one another (4-way isolation). In this way, the modules can be used for electrical isolation, signal conversion, and amplification both locally and close to the control system. The auxiliary voltage required is indicated by a green power LED.

DIP switches can be used to switch between a signal selected within the limits of the order key or for the fixed signal conversions
provided in the configuration table.

If no entry is made in the specified order key, the devices are supplied with the default configuration (input signal 0…20 mA, output signals 0…20 mA/ 0…10 V).

Adjustment following configuration is not necessary, as each transmission variant is calibrated and stored in the device.

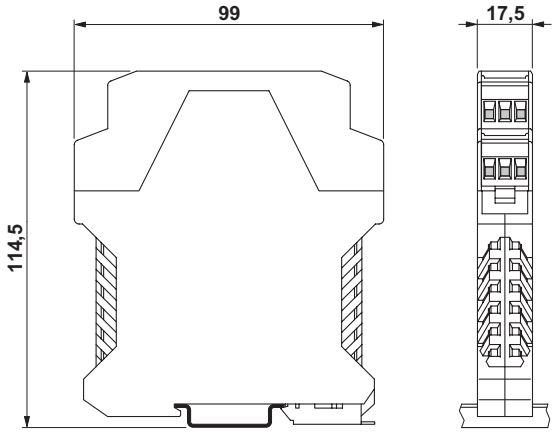

Headquarters: © Phoenix Contact GmbH & Co. KG • Flachsmarktstraße 8 • 32825 Blomberg • Germany
Phone +49 - 52 35 - 30 0 • Fax +49 - 52 35 - 34 12 00 • www.phoenixcontact.com
Local Contact: www.phoenixcontact.com/salesnetwork

2. Technical Data

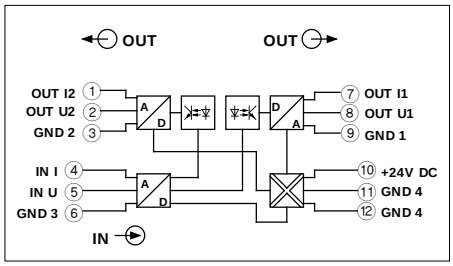

MCR-FL-C-UI-2UI-DCI

with configurable input and output

	Solid [mm²]	Stranded [mm²]	AWG
Connection data	0.2 - 2.5	0.2 - 2.5	25 - 14

Description		Type	Order No.	Pcs. / Pkt.
MCR signal multiplier, for doubling and electrical isolation of analog signals	Preconfigured	**MCR-FL-C-UI-2UI-DCI**	**28 14 85 4**	1
	Not configured	**MCR-FL-C-UI-2UI-DCI-NC**	**28 14 86 7**	1

Technical Data

Input	
Input signal range	0…24 mA/0…12 V, freely selectable in increments of 0.1 (mA/V)
Measuring range span	8 mA/4 V, minimum
Maximum input signal	50 mA or 30 V
Input resistance	50 Ω at I input/200 kΩ at U input
Output	
Output signal per channel	See order key/configuration table
Maximum output signal per channel	35 mA or 15 V
Load per channel	≤ 600 Ω at I output/≥ 10 kΩ at U output
General Data	
Supply voltage	20…30 V DC
Current consumption (without load)	< 25 mA
Transmission error	< 0.15% of the final value; 0.05% of the final value, typical
Temperature coefficient	< 0.015%/K, 0.0075%/K, typical
Limit frequency (3 dB)	30 Hz
Step response (10 - 90%)	12 ms
Test voltage	1.5 kV AC, 50 Hz, 1 minute
Protective circuit	Transient protection
Ambient operating temperature range	-20°C to +55°C
Degree of protection	IP20
Connection method	Plug-in COMBICON screw terminal block
Mounting position/mounting	Any
Electromagnetic compatibility:	CE Conformance with EMC Directive 89/336/EEC
• Noise emission	EN 50 081-2
• Noise immunity	EN 50 082-2

CE

Conformance With EMC Directive 89/336/EEC and the Low Voltage Directive 73/23/EEC

EMC (Electromagnetic Compatibility)		
Noise Immunity According to EN 50082-2		
• Electrostatic discharge (ESD)	EN 61000-4-2	8 kV air discharge [2]
• Electromagnetic HF field	EN 61000-4-3	
Amplitude modulation		10 V/m [1]
Pulse modulation		10 V/m [1]
• Fast transients (burst)	EN 61000-4-4	Input/output/supply 2 kV/5 kHz [2]
• Surge current loads (surge)	EN 61000-4-5	Input/output: 2 kV/42 Ω [2] Supply: 0.5 kV/2 Ω/12 Ω [2]
• Conducted interference	EN 61000-4-6	Input/output/supply 10 V [1]
Noise Emission According to EN 50081-2	EN 55011	Class A

EN 61000 corresponds to IEC 1000/
EN 55011 corresponds to CISPR11

[1] Criterion A: Normal operating characteristics within the specified limits.
[2] Criterion B: Temporary adverse effects on the operating characteristics which the device corrects automatically.

Class A: Industrial application, without special installation measures.

Approval

c UL us LISTED

PROCESS CONTROL EQUIPMENT FOR HAZARDOUS LOCATIONS 31ZN

Cl. I, Zn. 2, AEx nC IIC T6 / Ex nC IIC T6
Cl. I Div. 2, Groups A, B, C and D

A) This equipment is suitable for use in Class I, Division 2, Groups A, B, C and D or non-hazardous locations only.
B) Warning - explosion hazard - substitution of components may impair suitability for Class 1, Division 2.
C) Warning - explosion hazard - do not disconnect equipment unless power has been switched off or the area is known to be non-hazardous.

MCR-FL-C-UI-2UI-DCI – Signal Multiplier

① Upper housing part, can be removed to set DIP switches

② Plug-in screw terminal blocks

③ Metal lock for fastening on the DIN rail

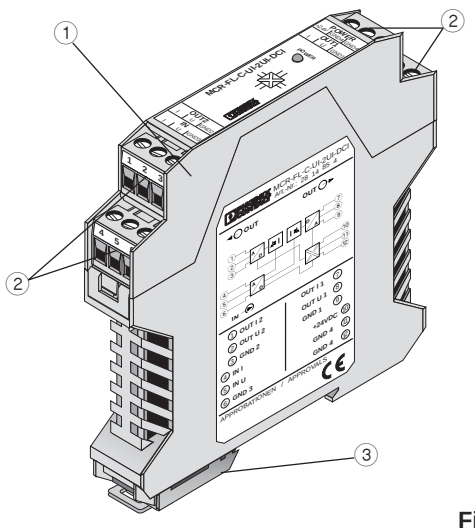

Fig. 06

3. Configuration

3.1. Opening the Device (Fig. 07)

The fastenings on both sides of the upper housing part can be released using a screwdriver ①. The upper housing part and the electronics can now be pulled out about 3 cm ②.

Ensure you take sufficient measures against electrostatic discharge

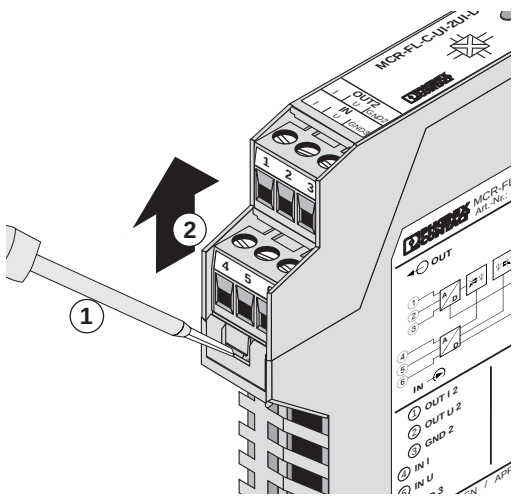

Fig. 07

3.2. Setting (Fig. 08)

Changes to the ordered connection method settings are made via DIP switches S1 to S10.

In addition to the preconfigured signal, which is preset by the order key, the remaining 9 DIP switches and their signal behavior can be enabled using DIP switch 10.

Configuration	S10
Signal range specification via DIP switches	OFF
Signal ranges preset by order key	**ON**

Input (IN)	S1	S2	S3
0…20 mA	OFF	OFF	OFF
0…10 mA	OFF	OFF	**ON**
4…20 mA	OFF	**ON**	OFF
2…10 mA	OFF	**ON**	**ON**
0…10 V	**ON**	OFF	OFF
1…5 V	**ON**	OFF	**ON**
0…5 V	**ON**	**ON**	OFF
2…10 V	**ON**	**ON**	**ON**

The current and voltage channel can be used in parallel at each output so that up to four signal outputs with full load capability are provided.

Please note: Where possible, output 1 should be used as a current output.

Output: Current/Voltage Signal	Output 1 (OUT 1)			Output 2 (OUT 2)		
	S4	S5	S6	S7	S8	S9
0…20 mA / 0…10 V	OFF	OFF	OFF	OFF	OFF	OFF
0…20 mA / 1…5 V	OFF	OFF	**ON**	OFF	OFF	**ON**
0…20 mA / 0…5 V	OFF	**ON**	OFF	OFF	**ON**	OFF
0…10 mA / 0…5 V	OFF	**ON**	**ON**	OFF	**ON**	**ON**
4…20 mA / 0…10 V	**ON**	OFF	OFF	**ON**	OFF	OFF
4…20 mA / 1…5 V	**ON**	OFF	**ON**	**ON**	OFF	**ON**
4…20 mA / 0…5 V	**ON**	**ON**	OFF	**ON**	**ON**	OFF
4…20 mA / 2…10 V	**ON**	**ON**	**ON**	**ON**	**ON**	**ON**

If the value is outside the measuring range, a linear transmission response is triggered.

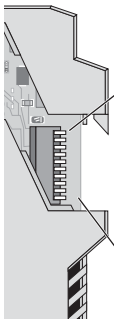

DIP	DIP Switch Function
10	Signal range specification according to the order key or DIP switches
9	Output 2: Setting the output signal ranges
8	
7	
6	Output 1: Setting the output signal ranges
5	
4	
3	Setting the input signal range
2	
1	

Fig. 08

4. Application Example (Fig. 09)

Level measurement with ultrasound and subsequent signal multiplication

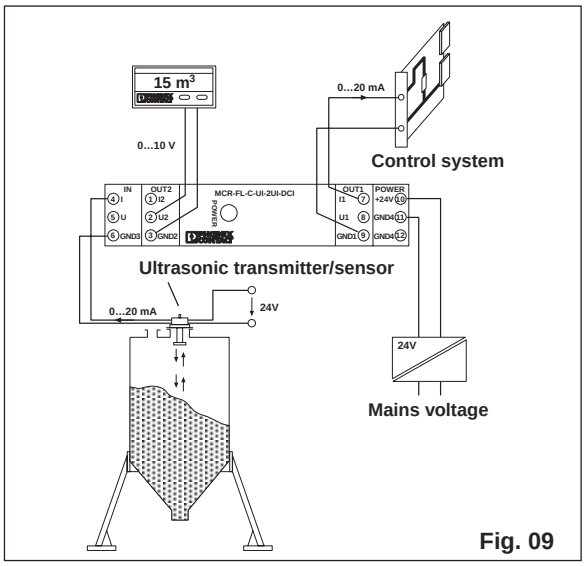

Fig. 09

5. Order Key

MCR-FL-C-UI-2UI-DCI

The standard configuration will be supplied if customer order details are incorrect or not provided (provided in the order key as an example).

Order No.	Input Signal	Input Signal (Standard and Special Signals) Start Value	Final Value	Output Signal (Standard Signals) Output 1	Output 2
28 14 85 4	**I**	**0.0**	**20.0**	**OUT01**	**OUT01**
Standard configuration	I ≙ Current U≙ Voltage	I ≙ 0.0 mA I: Freely selectable between U: Freely selectable between	I ≙ 20.0 mA I: Freely selectable between U: Freely selectable between	OUT01≙0...20 mA OUT02≙4...20 mA OUT03≙0...10 V OUT04≙2...10 V OUT05≙0...5 V OUT06≙1...5 V OUT16≙0...10 mA	OUT01≙0...20 mA OUT02≙4...20 mA OUT03≙0...10 V OUT04≙2...10 V OUT05≙0...5 V OUT06≙1...5 V OUT16≙0...10 mA

- **Minimum measuring range span 8.0 mA/4.0 V [2])**
- **Increment 0.1 mA/0.1 V**

[2]) Order examples:

		Input Signal (Standard and Special Signals) Start Value	Final Value	Output Signal Output 1	Output 2
28 14 85 4	**I**	**5.3**	**13.3**	**OUT01**	**OUT01**
	I ≙ Current	I ≙ 5.3 mA	I ≙ 13.3 mA		

Measuring range span 8.0 mA, i.e., can be ordered.

28 14 85 4	**U**	**7.8**	**11.8**	**OUT01**	**OUT03**
	U≙ Voltage	I ≙ 7.8 V	I ≙ 11.8 V		

Measuring range span 4.0 V, i.e., can be ordered.