THIS DRAWING IS UNPUBLISHED. RELEASED FOR PUBLICATION -,- .
© COPYRIGHT - By - ALL RIGHTS RESERVED.

LOC	DIST
AR	00

REVISIONS

P	LTR	DESCRIPTION	DATE	DWN	APVD
	B2	REVISED PER ECR-15-016887	28NOV2015	NK	DC

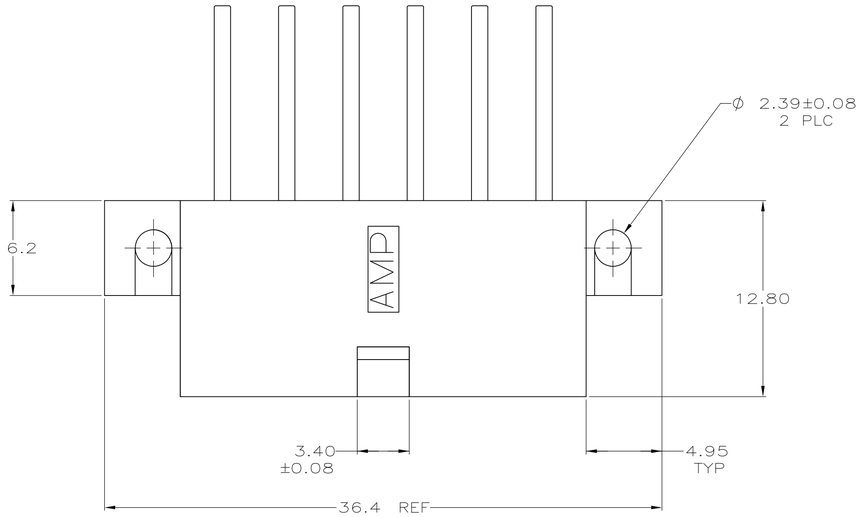

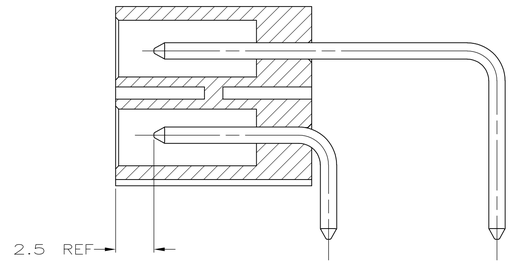

SECTION B–B

1. CONTACT: 0.00076 GOLD AT INTERFACE. 0.00254 MIN MATTE TIN ON SOLDER TAIL. 0.00127 MIN NICKEL UNDERPLATE ALL OVER.
2. MATES WITH AMP-DUAC/PL PLUG RECEPTACLE 794156 AND ITS CONTACTS.
3. CLEARANCE ENVELOPE FOR MATING PLUG RECEPTACLE LATCH.
4. OBSOLETE PARTS: OBSOLETE CIS STREAMLINING PER D.RENAUD/D.SINISI

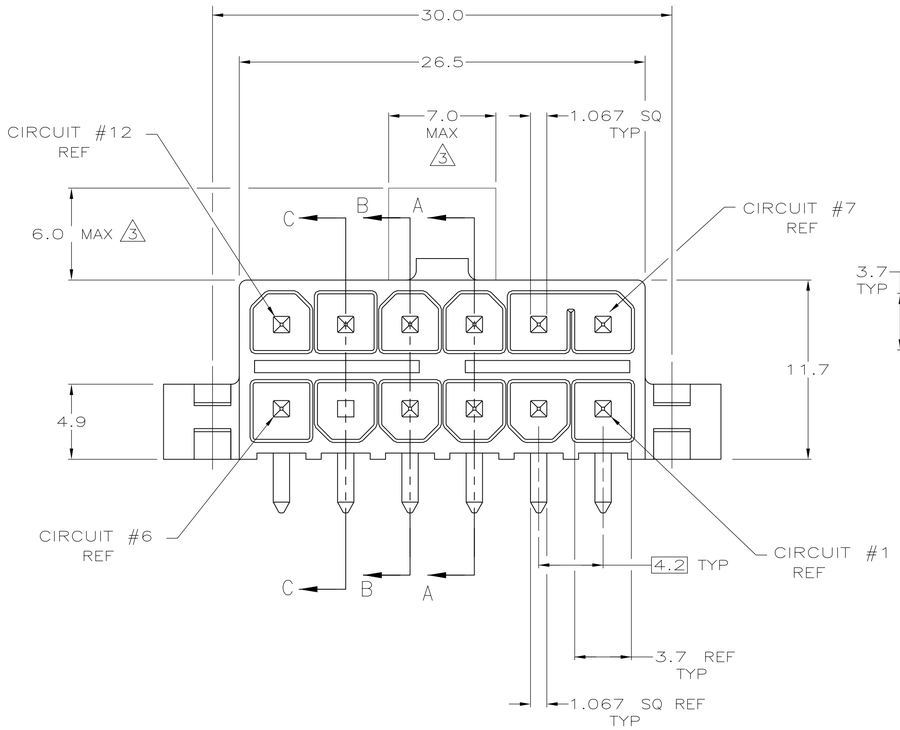

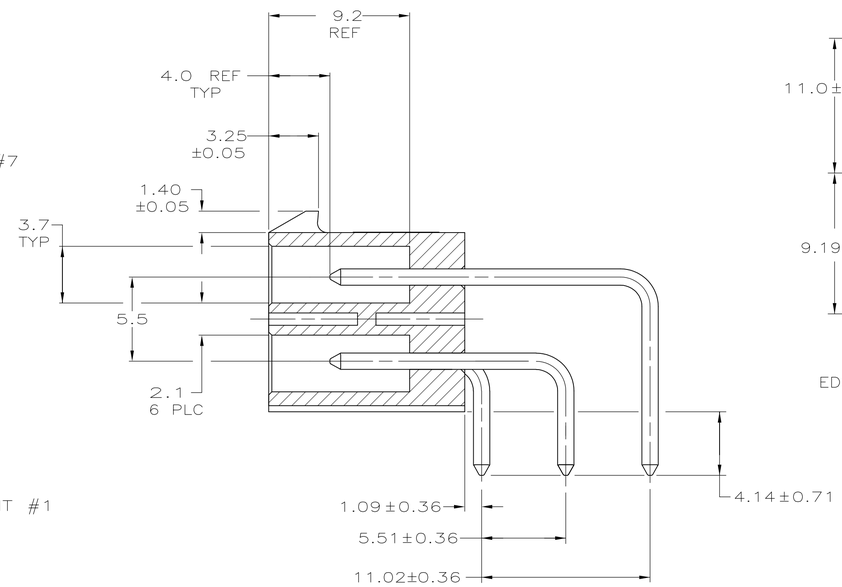

SECTION A–A

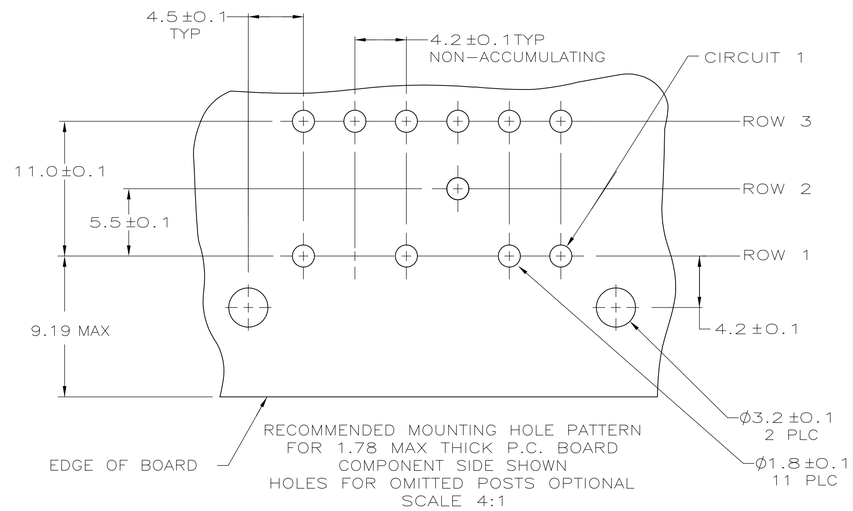

TERMINAL LOADING CHART

	POSITION	1	2	3	4	5	6	7	8	9	10	11	12	PART NUMBER
4 OBSOLETE	PIN TYPE	P1	P1	EP2	GP1	V	P1	EP3	EP3	EP3	EP3	EP3	EP3	1761364-1
	PIN TYPE	P1	P1	EP2	P1	P1	P1	GP3	V	EP3	EP3	V	EP3	1761364-2

P1 = STANDARD PIN IN ROW 1
V = VOID (NO PIN)
EP3 = EXTENDED PIN IN ROW 3
GP3 = GROUND PIN IN ROW 3
GP1 = GROUND PIN IN ROW 1
EP2 = EXTENDED PIN IN ROW 2

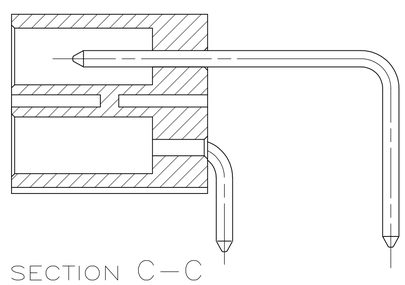

SECTION C–C

	MATERIAL	FINISH	MATERIAL	COLOR	PART NUMBER
	PIN		HOUSING		
	BRASS	1	PBT, UL94V-0	NATURAL(WHITE)	1761364-2
4 OBSOLETE	BRASS	1	PBT, UL94V-0	NATURAL(WHITE)	1761364-1 (SHOWN)

THIS DRAWING IS A CONTROLLED DOCUMENT.

DIMENSIONS: mm

TOLERANCES UNLESS OTHERWISE SPECIFIED:
0 PLC ± –
1 PLC ± 0.2
2 PLC ± 0.13
3 PLC ± –
4 PLC ± –
ANGLES ± 2°

MATERIAL: SEE TABLE
FINISH: SEE TABLE

DWN 04 JUN 04 AL FRANTUM
CHK 04 JUN 04 AL FRANTUM
APVD 01MARCH06 S.FLICKINGER
PRODUCT SPEC 108-1646
APPLICATION SPEC 114-6067
WEIGHT –

TE Connectivity

NAME: HEADER ASSEMBLY
RIGHT ANGLE 12 CIRCUIT
AMP-DUAC/PL(TM) POWER CONNECTOR

SIZE	CAGE CODE	DRAWING NO	RESTRICTED TO
A1	00779	C-1761364	–

CUSTOMER DRAWING | SCALE 5:1 | SHEET 1 OF 1 | REV B2

4805 (3/11)