ITEM NO.	PART NUMBER	DESCRIPTION	QTY.	COMPONENT NOTES
1	50-00525	Connector, dc plug, 5.5x2.5xL18.5 mm, molding style, spring contacts, white insulators	1	
2	50-00027	Connector, dc jack, 5.5x2.5xL17.4 mm, molding style	1	
3	30-00396	Wire, 2C TS, 18 AWG, UL2468, 300V, 80C, 4.4 mm, VW-1, PVC, 87A, white	1	
4	24-00006	Overmold, PVC, white	1	
5	24-00004	Overmold, PVC, white	1	

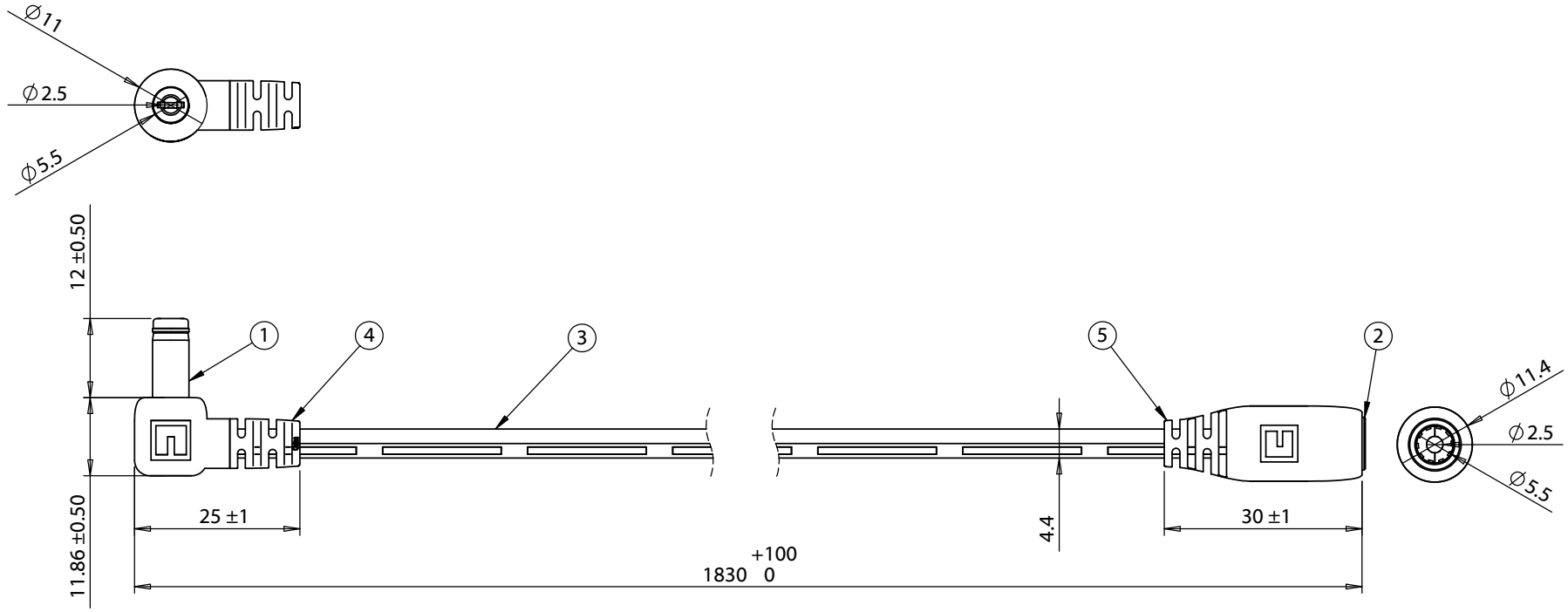

Notes:
Cables individually tied and bundled in groups of 10

Functionally equivalent components may be substituted

7 A, 12 Vdc

Wiring Diagram		
50-00525	wire color	50-00027
center	white with stripe	center
sleeve	white	sleeve

Revision:	Date:	Description:
A	12/15/2015	Initial release

Prepared: GL 2016.06.16 12:29:43 -07'00'

Verified: LA Digitally signed by LA DN: c=LA, o=Tensility, ou=Engineering, email=QA0020@Tensility.com, c=US Date: 2016.06.23 15:06:32 -07'00'

Dimensions are in millimeters.
Tolerances:
X: ± 0.5 mm
X.X: ± 0.3 mm
X.XX: ± 0.05 mm

Notes:

RoHS and REACH compliant

Function test: no open, no short circuit, no intermittent

Description:

Cable, 1830 mm, 5.5x2.5x12mm 90° 50-00525 plug to 5.5x2.5mm 50-00027 jack, 18 AWG, 30-00396, white

TENSILITY

tel 1.541.323.3228 *800* 877.670.7118
fax 1.541.323.4202 *web* tensility.com

Size: A

Part number: 10-01255

Scale: 1:2

Sheet 1 of 1

5 4 3 2 1