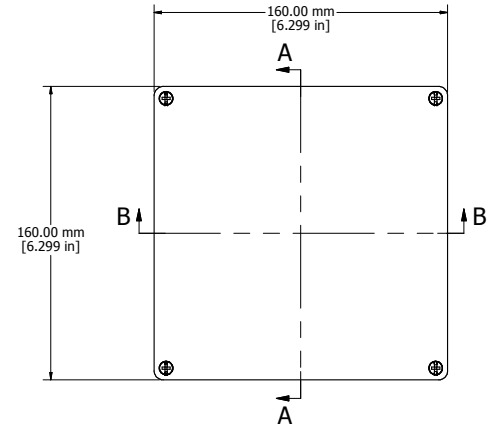

ASSEMBLY

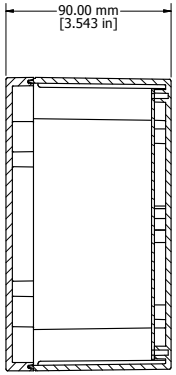

SECTION A-A

File #E65324
NEMA 4, 4X

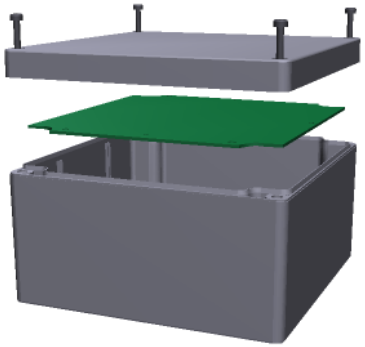

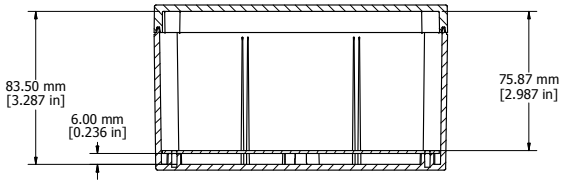

SECTION B-B

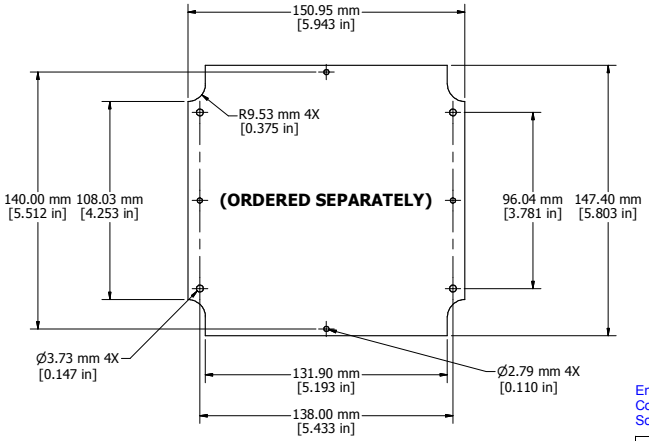

STEEL INNER PANEL

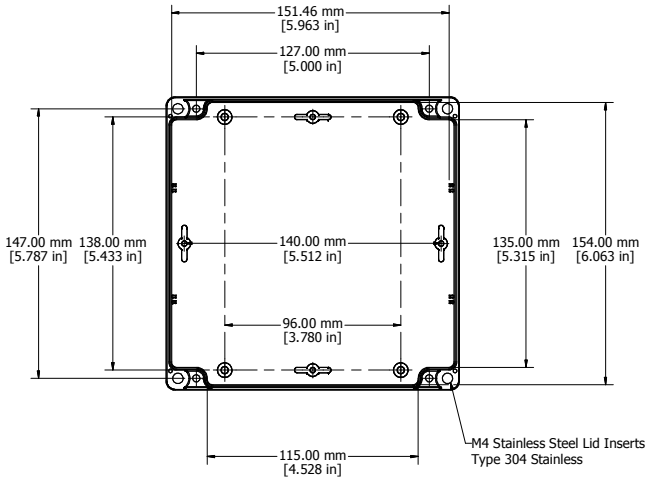

BOX - INSIDE

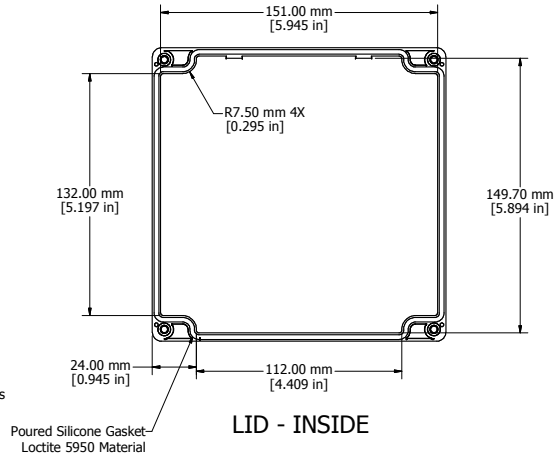

LID - INSIDE

Enclosures can be Factory Modified (Milling, Drilling, Printing etc.)
Contact mjm@hammondmfg.com for Quotes.
Solid models of this enclosure available in STEP or IGES see Web.

NOTE
Purchased assembly includes box, lid, and 4 cover screws
Recommended Cover screw torque -- 2.5 lbf-in (30 cN-m)
Polycarbonate version is UL 508 approved Matl UL94 - V0 / 5VA @ 3mm

1554S	
1554SRegular Enclosure	
General Purpose ABS RAL-7035	1554SGY
Polycarbonate RAL-7035	1554S2GY
1554S Clear / Smoke Lid Enclosure	
Polycarbonate Box / Clear Polycarbonate Lid	1554S2GYCL
Polycarbonate Box / Smoke Polycarbonate Lid	1554S2GYSL
ACCESSORIES	
Heavy Duty 16 Gauge Galvanized Steel Panels	1554RPL
Steel Panel / P.C. Board Machine Screw [M3 x 8mm Nickel Plated]	1591MM100
Steel Panel / P.C. Board Self Tapping Screw [#6 X 1/4" (6.4mm) Nickel Plated]	1598ATS100
Cover Screws (Pkg 4) [M4 X 20mm Type 304 Stainless Steel]	SC1554

HAMMOND MANUFACTURING™

1554S

www.hammondmfg.com