THIS DRAWING IS UNPUBLISHED. RELEASED FOR PUBLICATION ,19 .
© COPYRIGHT 19 BY AMP INCORPORATED. ALL RIGHTS RESERVED.

LOC	DIST
AD	25

REVISIONS

P	LTR	DESCRIPTION	DATE	DWN	APVD
	A3	ECN AD-2589 M.S.	8-88	-	-
	B	REV PER EC 0U1B-0131-01	15 OCT 01	BC	WM

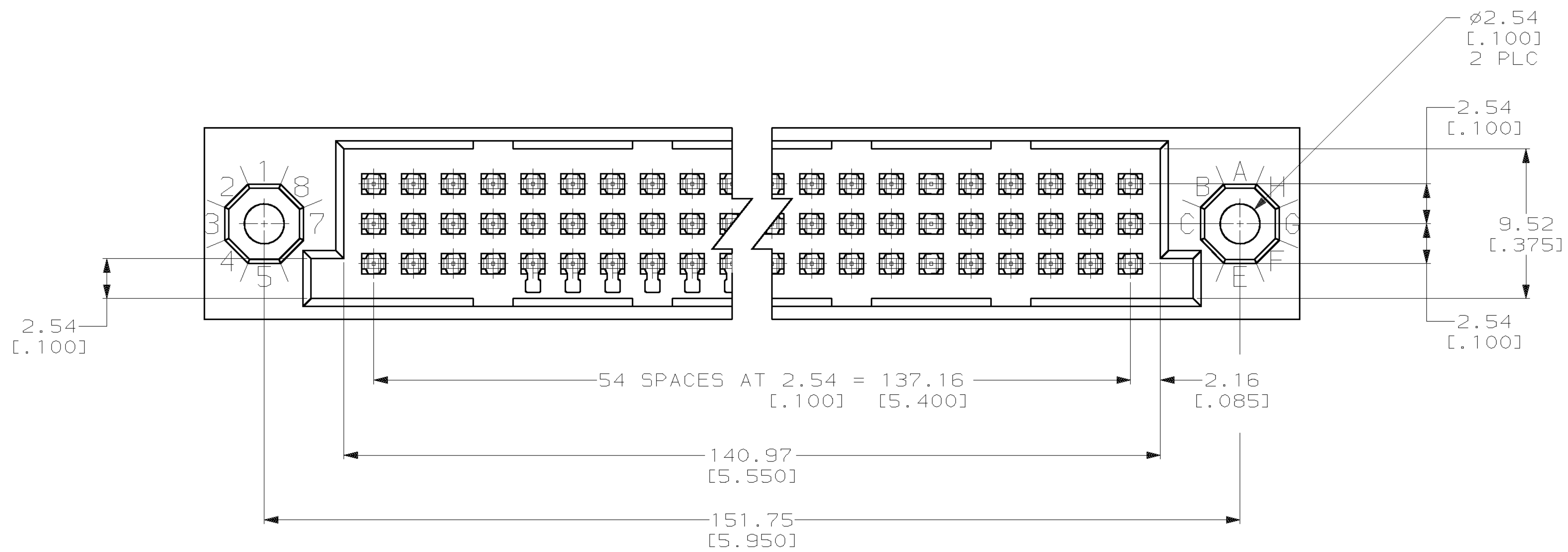

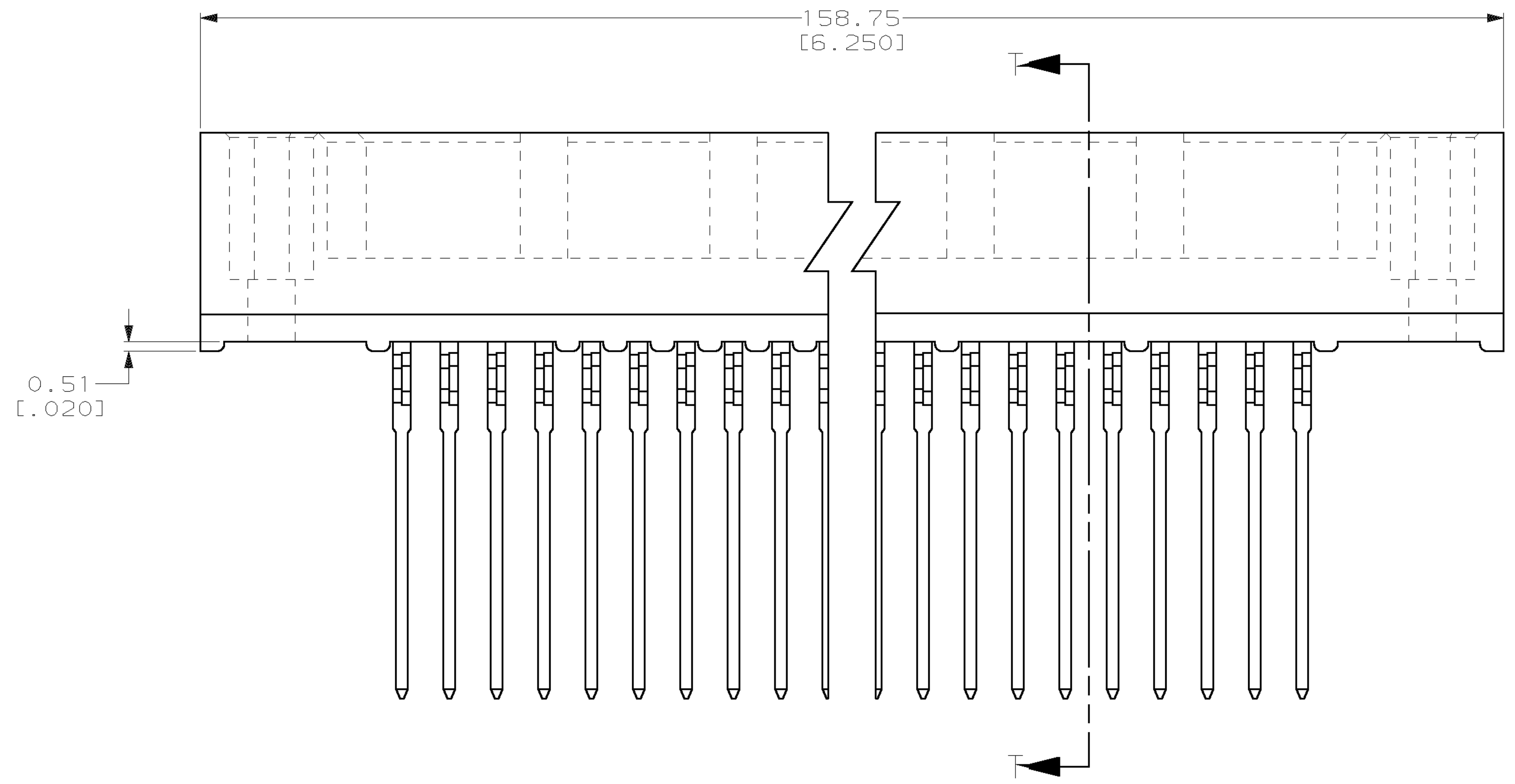

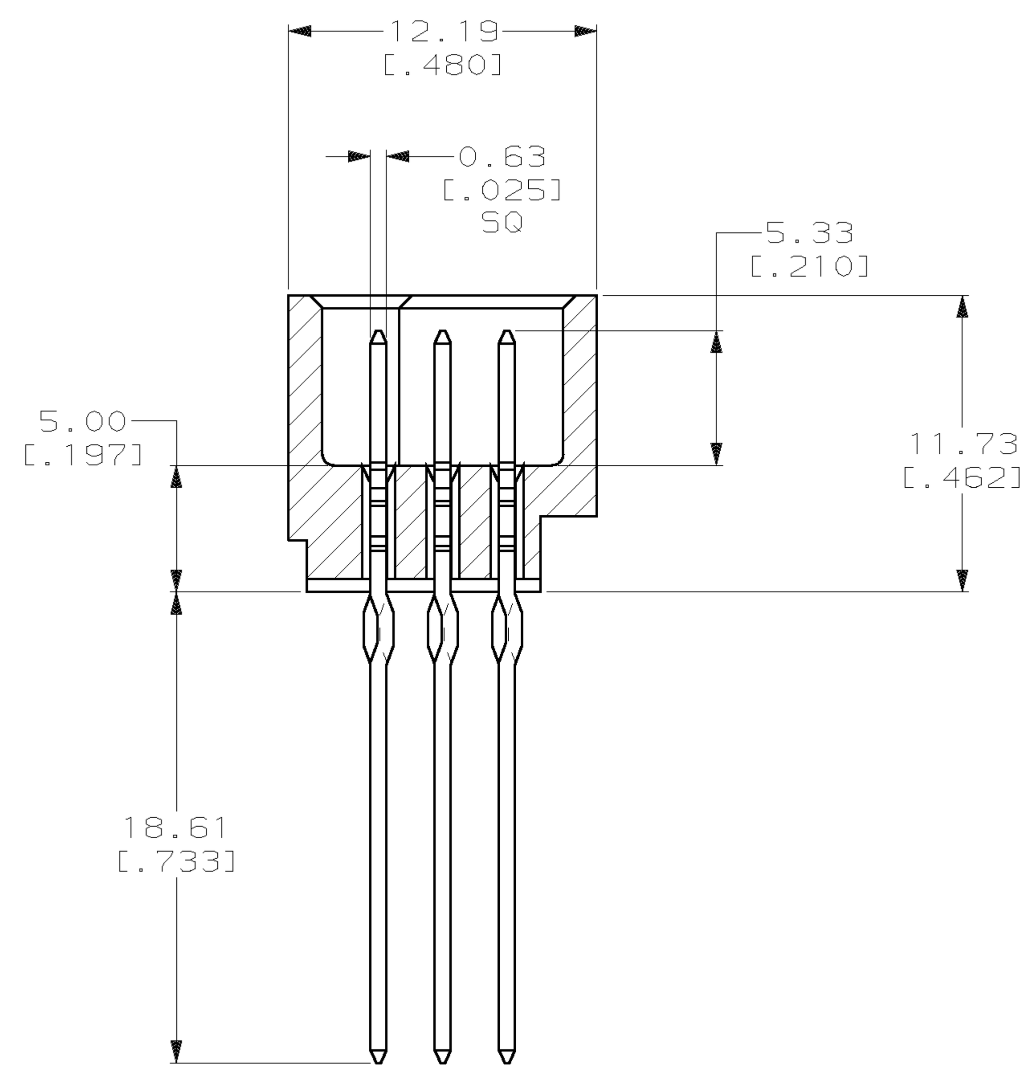

SECTION T-T

1. HOUSING MATERIAL: THERMOPLASTIC, BLACK.
2. CONTACT MATERIAL: PHOS. BRONZE.
3. CONTACT FINISH: 0.76μm[.000030] MIN GOLD IN CONTACT AREA OVER 1.27μm-2.54μm[.000050-.000100] NICKEL, TIN-LEAD PLATED POSTS.
4. ACTION PIN POSTS REQUIRE 2.36[.093] MIN THICK P.C. BOARD. RECOMMENDED P.C. BOARD HOLES ARE 1.151 [.0453] DIA PLATED THRU WITH 0.025-0.076 [.001-.003] COPPER, WITH 0.0076 [.0003] MIN TIN-LEAD PLATING, FINISHED HOLE AFTER PLATING 0.94-1.09 [.037-.043] DIA.

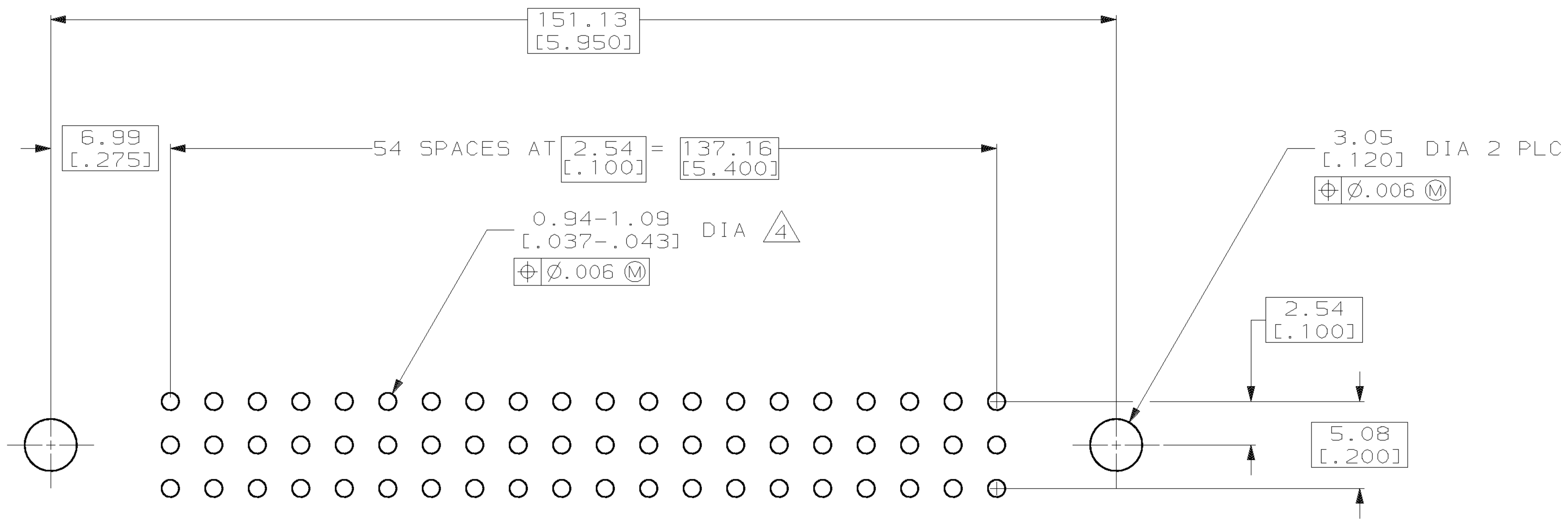

RECOMMENDED P.C. BOARD LAYOUT

NUMBER END	A	1		1		1		1		1		1		1		1		1		1		1	1	1	1	1	1	1	1	1	1	1	1	1	1	1	1	1	1	1	1	1	1	1	1	1	1	1	1	1	1	1	1	1	1	1	A	LETTER END
	B		1		1		1		1		1		1		1		1		1		1																													1	1	1	1	1	1	1	B	
	C	1		1		1		1		1		1		1		1		1		1		1	1	1	1	1	1	1	1	1	1	1	1	1	1	1	1	1	1	1	1	1	1	1	1	1	1	1	1	1	1	1	1	1	1	1	C	
	ROW	55					50					45					40					35					30					25					20					15					10					5				1	ROW	

COLUMN NUMBER - CONTACT LOCATION TABLE

107	532835-1
NO OF POSN	PART NUMBER

THIS DRAWING IS A CONTROLLED DOCUMENT.

DIMENSIONS: mm [INCHES]

TOLERANCES UNLESS OTHERWISE SPECIFIED:
0 PLC ±-
1 PLC ±-
2 PLC ±0.13 [.005]
3 PLC ±-
4 PLC ±-
ANGLES ±-

MATERIAL 1 2
FINISH 3

DWN	P.YEAGER	2-18-83
CHK	P.F.Y.	3-1-83
APVD	F.JUNKINS	3-2-83

PRODUCT SPEC —
APPLICATION SPEC —
WEIGHT —

AMP Incorporated
Harrisburg, PA 17105-3608

NAME: HDI, PIN ASSEMBLY, 3 ROW SELECT LOADED

SIZE	CAGE CODE	DRAWING NO	RESTRICTED TO
A1	00779	C- 532835	—

CUSTOMER DRAWING

SCALE 4:1 SHEET 1 OF 1 REV B

AMP 4805 REV 11JUN97

15-OCT-01 08:58:39 amp40973 /home/amp40973/dmmod