NOTES:

1. MATERIALS AND FINISHES:
   BODY-FRONT, BODY-REAR,CAP,
   OUTER CONTACT,COUPLING NUT -BRASS, NICKEL PLATING
   CONTACT - BRASS, GOLD PLATING
   INSULATOR - PTFE
   INSULATOR REAR - ULTEM 1000
   FERRULE- BRASS, NICKEL PLATING

2. ELECTRICAL:
   A. IMPEDANCE: 50 OHM
   B. FREQUENCY RANGE: DC - 6 GHz
   C. VSWR : 1.15 MAX @ DC-6 GHz
   D. DIELECTRIC WITHSTANDING VOLTAGE: 1000 VRMS, MIN.

3. MECHANICAL:
   A. DURABILITY: 500 CYCLES MIN.
   B. TEMPERATURE RANGE: -65° C TO +165° C

4. PACKAGING:
   A. QUANTITY: SINGLE PACK
   B. MARKING: BAG TO BE MARKED
      "AMPHENOL RF, 82-6557 AND DATE CODE"

5. RECOMMENDED CABLE ASSEMBLY INSTRUCTIONS:
   A. TRIM CABLE AS SHOWN.
   B. SLIDE HEAT SHRINK TUBE,FERRULE & REAR INSULATOR ONTO CABLE.
   C. INSERT CABLE WITH FOIL ENTERING CONNECTOR AND BRAID OVER KNURL.
   D. SOLDER CABLE CENTER CONDUCTOR TO CONTACT.
   E. CRIMP FERRULE OVER BRAID WITH 0.255" HEX DIE.
   F. APPLY HEAT SHRINK TUBING OVER FERRULE.
   G. HEAT SHRINK TUBING SHOULD FULLY (360 DEG) COVER THE BUMP ON BODY
      AND END WITHIN AREA "A"

6. CAP ASSEMBLY INSTRUCTIONS:
   A. PLACE O-RING ON CAP AS SHOWN.
   B. ASSEMBLE CAP TO BODY WITH 15 IN-LBS TORQUE.

7. RECOMMENDED COUPLING TORQUE : 6-10 IN-LBS.

8. SHOWS CABLE ENTRY DIMENSIONS.

THIRD ANGLE PROJ.

REVISIONS				
REV	DESCRIPTION	DATE	ECO	APPR
A	RELEASE TO MFG.	19-Mar-13	49372	TD

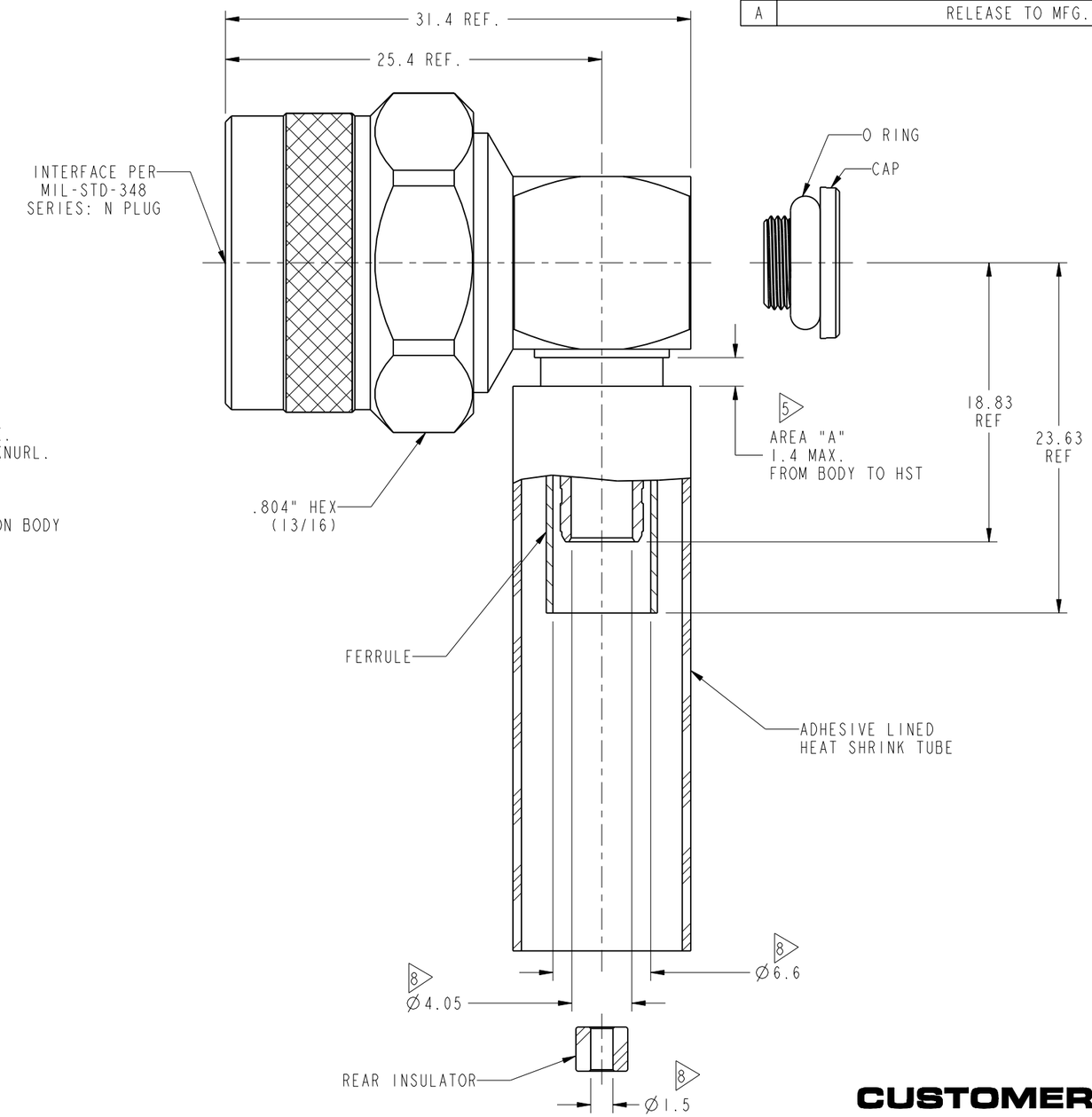

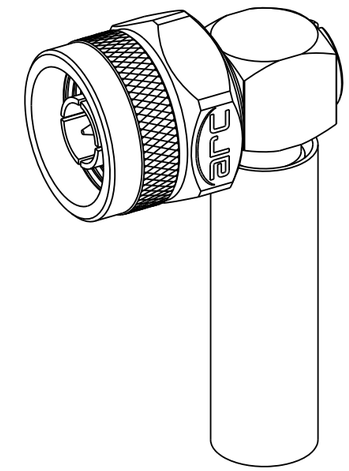

SCALE 1.500

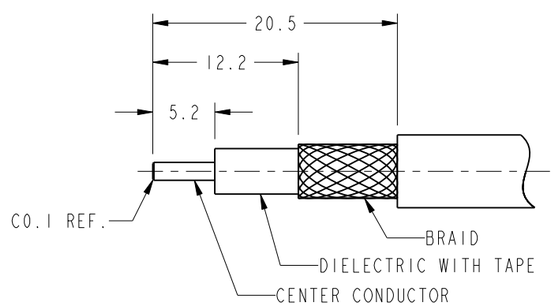

RECOMMENDED CABLE STRIPPING DIMENSIONS

CUSTOMER OUTLINE DRAWING

ALL OTHER SHEETS ARE FOR INTERNAL USE ONLY

UNLESS OTHERWISE SPECIFIED, DIMENSIONS ARE IN METRIC AND TOLERANCES ARE:

<0.5mm	0.5 - 6mm	6 - 30mm	30 - 120mm	ANGLES
± 0.05mm	±0.1mm	±0.2mm	± 0.3mm	±1°

NOTICE - These drawings, specifications, or other data (1) are, and remain the property of Amphenol corp. (2) must be returned upon requiest; and (3) arre confidential and not to be disclosed to any person other than those to whom they are given by Amphenol Corp. the funishing of these drawings, specifications, or other data by Amphenol Corp., or to any other person to anyone for any purpose is not to be regarded by implicatioin or otherwise in any manner licensing, granting rights to permitting such holder or any other sperson to manufacture, use or sell any product, process or design, patented or otherwsie, that may in any way be related to or disclosed by said drawings, specifications, or other data.

MATERIAL: SEE NOTES	DRAWN T.DENG	DATE 19-Mar-13	TITLE N PLUG R/A IP-67 FOR LMR-240-UF CABLE
	ENGINEER ABHAYA KISHORE	DATE 10-Aug-12	
REFERENCE EAR # 5423	APPROVED S.HSIEH	DATE 19-Mar-13	SCALE: 2.8:1.0 SHEET 2 OF 2
CONFIGURATION LEVEL:	CAD FILE		DWG SIZE B REV A
FINISH			

Amphenol RF
www.amphenolrf.com

DRAWING NO. 82-6557
ITEM NO. 82-6557
PART NO. 82-6557