Alle Rechte vorbehalten/ *All rights reserved*

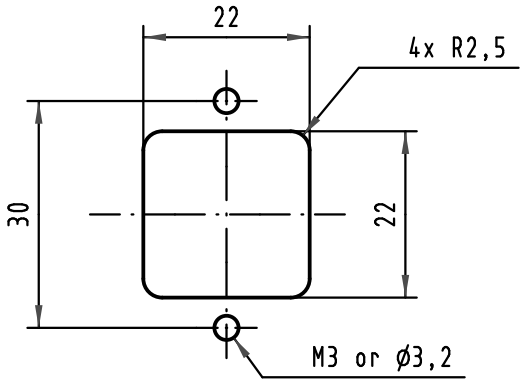

Recommended panel cutout
scale 1:1

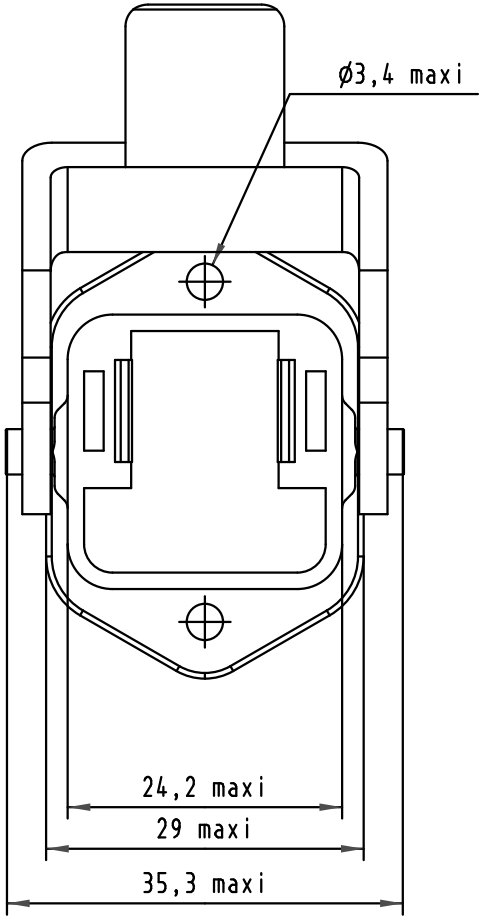

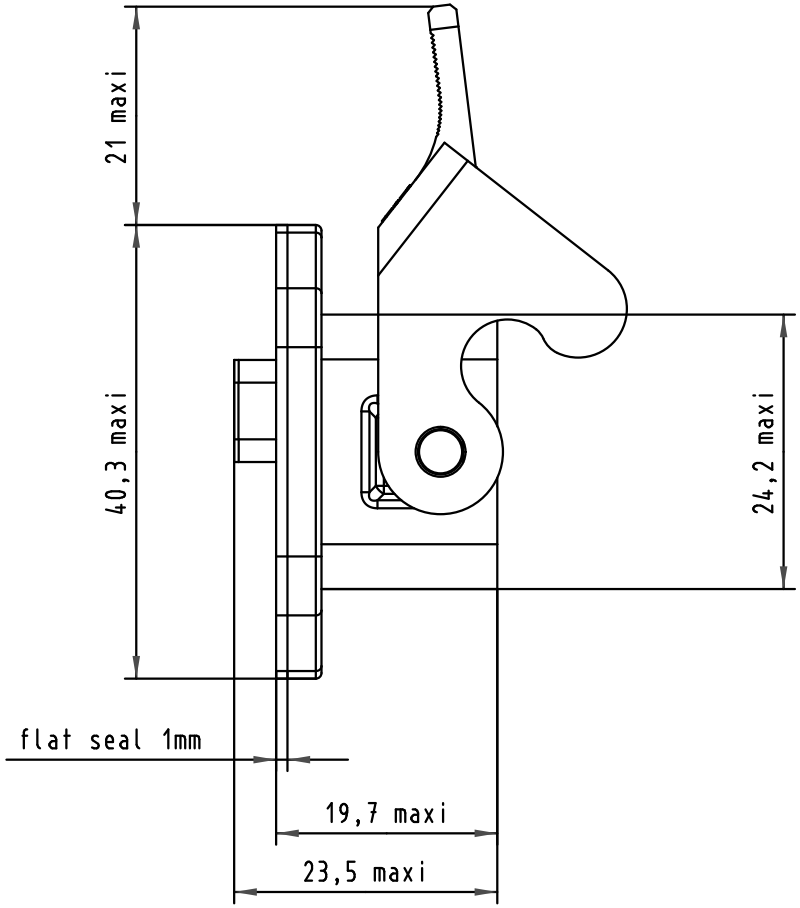

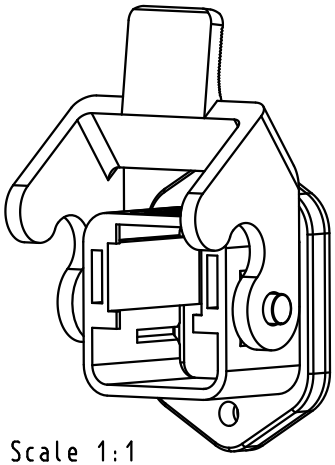

Scale 1:1

Connector pitch on panel
Axis X = 36 mm
Axis Y = 55 mm

				Dat.	Name
			Detail.	03/10/07	BD
			Insp.		
			Stand.		
34761	03/10/07	BD			
Mod.	Dat.	Name			

All Dim. in mm
Orig. Size DIN A 4

HARTING EURL
F-95972 Paris

IP67 hybrid HAN 3A receptacle
black plastic housing
open lever up

Maßstab/ *Scale* 1,5:1

TB 09 45 525 0020

Sub.

Blatt/ *Page* 1/1