THIS DRAWING IS UNPUBLISHED. RELEASED FOR PUBLICATION FEB ,2004.
© COPYRIGHT 2004 By – ALL RIGHTS RESERVED.

LOC	DIST
E	B

REVISIONS

P	LTR	DESCRIPTION	DATE	DWN	APVD
	D2	REVISED PER ECO-11-005033	01APR11	RK	HMR
	E	REVISED PER ECO-12-010787	11JUN12	TITAN	MARTIN

NOTES

1. TRAY PACK: 50PCS/TRAY, 1000PCS/OUTER BOX
2. SINGLE PACK: 1PC/ONE BAG, 100 BAGS/ONE INNER BOX, 10 INNER BOXES/ONE OUTER BOX
3. Au PLATING
4. Ni PLATING
5. FOR TECHNICAL DATA REFER TO YOUR LOCAL TE CONNECTIVITY SALES OFFICE
6. ALL DIMENSIONS ARE NOMINAL FOR REFERENCE ONLY UNLESS OTHERWISE STATED

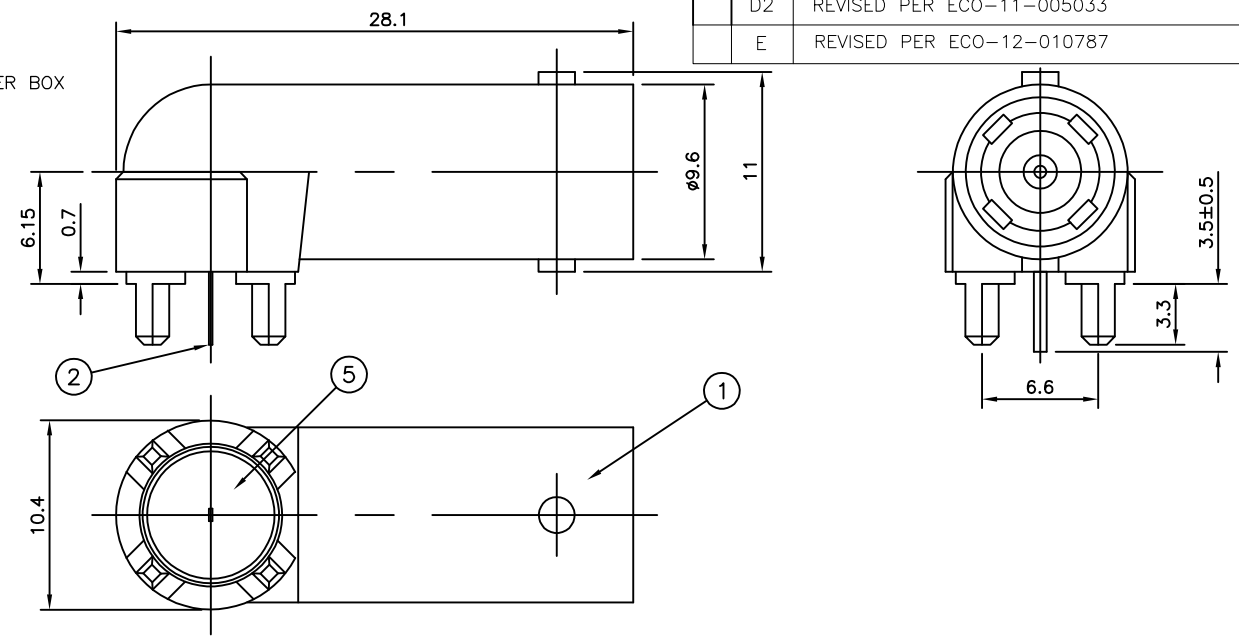

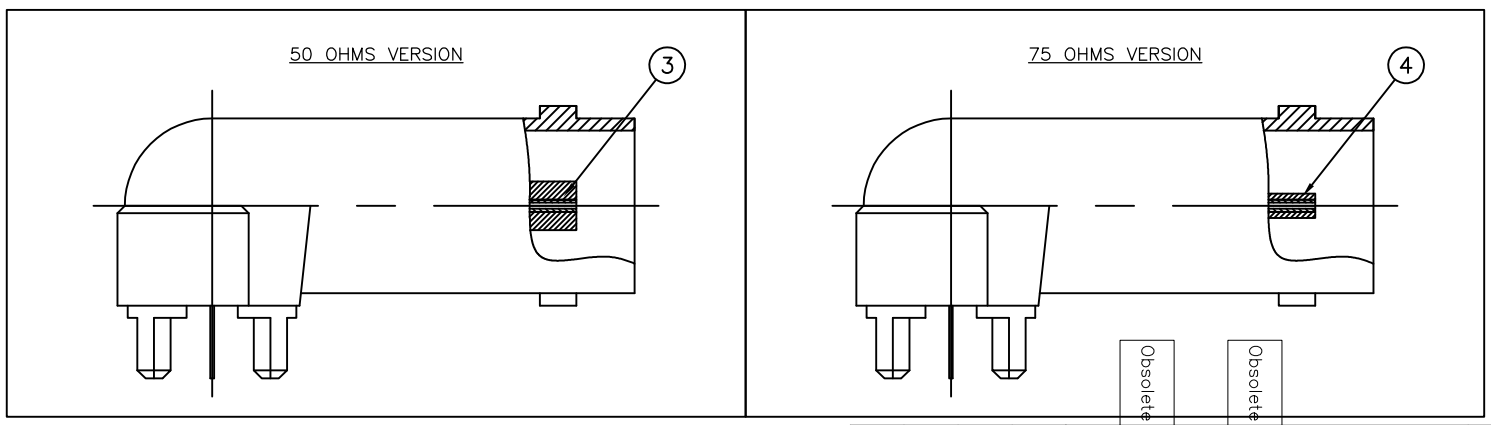

RECOMMENDED PCB LAYOUT WITH MOUNTING POSTS

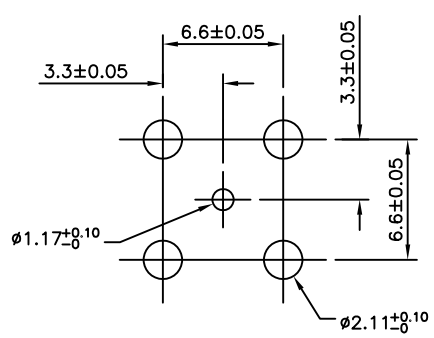

				1	1	1	1	PTFE	INSULATOR	5
				1	1	–	–	TPX	INSULATOR	4
				–	–	1	1	TPX	INSULATOR	3
				1	1	1	1	PHOS BRONZE (3)	CONTACT	2
				1	1	1	1	ZINC ALLOY (4)	BODY	1
				5--3	5--2	5--1	5--0	MATERIAL	DESCRIPTION	ITEM
				(1)	(2)	(2)	(1)			
QUANTITY PER ASSY								PARTS LIST		

Obsolete

Obsolete

THIS DRAWING IS A CONTROLLED DOCUMENT.

DIMENSIONS: mm

TOLERANCES UNLESS OTHERWISE SPECIFIED:

0 PLC	± 0.5
1 PLC	± 0.3
2 PLC	± 0.2
3 PLC	± –
4 PLC	± –
ANGLES	± –

MATERIAL: SEE TABLE

FINISH: SEE TABLE

DWN RITA ZUO 10 Mar 09
CHK ANSON MA 10 Mar 09
APVD BOB ZHAO 10 Mar 09
PRODUCT SPEC 108-112000
APPLICATION SPEC –
WEIGHT –

TE Connectivity

NAME: BNC LOW PROFILE ELBOW SOCKET – –

SIZE	CAGE CODE	DRAWING NO	RESTRICTED TO
A3	00779	C-1634513	–

CUSTOMER DRAWING

SCALE	SHEET	REV
NTS	1 OF 1	E