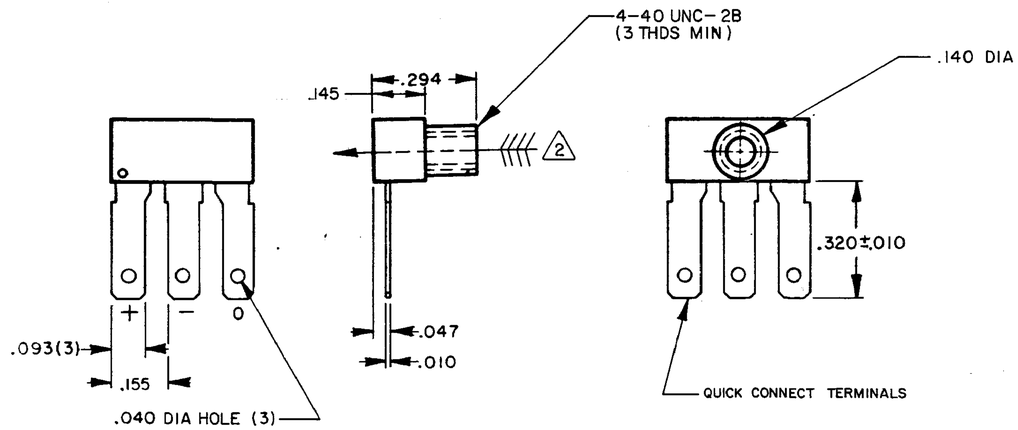

MAGNETIC CHARACTERISTICS 2 3 5

TEMP RANGE	-40°C TO 150°C	-40°C TO 100°C	0°C TO 70°C	ISSUE NUMBER	RELEASE NUMBER	CATALOG LISTING
OPERATE MAX	340	330	320	4	PR-3859	513SS16
RELEASE MIN	30	85	105			
DIFF MIN	23	23	23			
OPERATE MAX						
RELEASE MIN						
DIFF MIN						
OPERATE MAX						
RELEASE MIN						
DIFF MIN						

NOTES

1. CATALOG LISTING AND LOT NUMBER WILL BE STAMPED ON THE PACKAGE
2. TO ACTUATE THE DEVICE THE SOUTH POLE OF THE MAGNET OR MAGNETIC FLUX GENERATOR MUST BE PRESENTED TO THE CENTER OF THE FRONT SURFACE OF THE DEVICE. (THIS ASSUMES THE CONVENTION THAT THE DIRECTION OF THE EXTERNAL FLUX OF A MAGNET IS FROM THE NORTH TO THE SOUTH POLE OF THE MAGNET)
3. THE MAGNETIC FIELD STRENGTH (GAUSS) REQUIRED TO CAUSE THE SWITCH TO CHANGE STATE (OPERATE AND RELEASE) WILL BE AS SPECIFIED IN THE OPERATING CHARACTERISTICS. TO TEST SWITCH AGAINST THE SPECIFIED OPERATING CHARACTERISTICS, THE SWITCH MUST BE PLACED IN A UNIFORM MAGNETIC FIELD
4. V_S IS THE UNREGULATED SUPPLY VOLTAGE
5. AT SUPPLY VOLTAGE OF 6 TO 16 VDC AND OVER THE TEMPERATURE RANGE SPECIFIED
6. AT 24°C ± 2°C

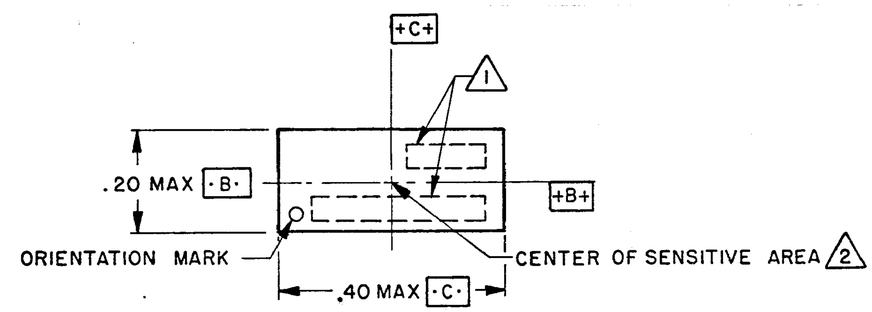

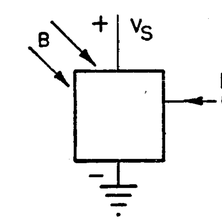

SWITCH SYMBOL

ABSOLUTE MAXIMUM RATING

SUPPLY VOLTAGE (V_S) 4	−1.2 TO +20 VOLTS DC
VOLTAGE EXTERNALLY APPLIED TO OUTPUT	+20.0 VDC MAX WITH SWITCH IN "OFF" CONDITION ONLY −0.5 VOLTS MIN WITH SWITCH IN "OFF" OR "ON" CONDITION
LOAD ON OUTPUT (CONTINUOUS)	MA
TEMPERATURE	-40°C TO +150°C
MAGNETIC FLUX	NO LIMIT, THE CIRCUIT CANNOT BE DAMAGED BY MAGNETIC OVERDRIVE

ELECTRICAL CHARACTERISTICS

	MIN	TYP	MAX	REMARKS
SUPPLY CURRENT 6		3 mA 5 mA	6.5 mA 10.0 mA	PLUS LOAD CURRENT Vs = 6 VOLTS Vs = 16 VOLTS 4
OUTPUT VOLTAGE 5 (OPERATED)		0.15 VOLTS	0.4 VOLTS	SINKING 20 MA MAX
OUTPUT LEAKAGE CURRENT 5 (RELEASED)			10 μA	LEAKAGE INTO SWITCH OUTPUT
OUTPUT SWITCHING TIME (SINKING 20 MA)				
RISE TIME		0.2 μs	1.5 μs	10% TO 90%
FALL TIME		0.1 μs	0.5 μs	90% TO 10%

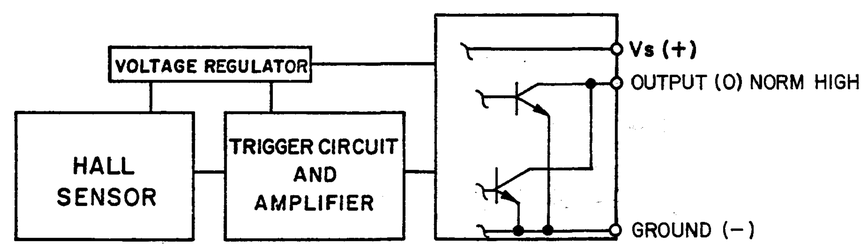

BLOCK DIAGRAM SHOWING CURRENT SINKING OUTPUT

THIS DRAWING COVERS A PROPRIETARY ITEM AND IS THE PROPERTY OF MICRO SWITCH, A DIVISION OF HONEYWELL. THIS DRAWING IS NOT TO BE COPIED OR USED WITHOUT THE APPROVAL OF MICRO SWITCH.

MICRO SWITCH
FREEPORT ILLINOIS, U S A
A DIVISION OF HONEYWELL
FED. MFG. CODE 51929

SOLID STATE SWITCH
MAGNETICALLY OPERATED

CATALOG LISTING
513SS SERIES
CHART I

SCALE 3 TO 1
DO NOT SCALE PRINT
UNLESS OTHERWISE NOTED
DIMENSIONS ARE IN INCHES
TOLERANCES ARE:
ONE PLACE (.0) ±.030
TWO PLACE (.00) ±.015
THREE PLACE (.000) ±.005
ANGLES ±1°
WEIGHT

513SS SERIES CHART I
M
DRAWING NUMBER
RELEASE NO. PR-3859
REPLACES
ISSUE 6
CHECK
REVISIONS
A CO-33787 J A L 12 JUNE 74
B CO35666 D B W 18 JUL 75
C CO-38223 J A L 3 MAR 77
D CO48802 T S M 26 DEC 80
E CO-61088 S S J. S. 12 MAR 87
CHECK
12 JUNE 74
DRAWN J A L 12 JUNE 74
FO-52863