THIS DRAWING IS UNPUBLISHED. RELEASED FOR PUBLICATION -,- .
© COPYRIGHT - BY TYCO ELECTRONICS CORPORATION. ALL RIGHTS RESERVED.

LOC	DIST
A	66

REVISIONS

P	LTR	DESCRIPTION	DATE	DWN	APVD
	D	ECR-07-027560	11-2007	MY	GB

PART NUMBER	REV	FIRST USED	TERMINATOR	FEED TYPE	DESCRIPTION
1529005-1	D	-	BENCH & LEADMAKER	MECH POST FEED	HD-I APPLICATOR
7-1529005-1	D	-	BENCH & LEADMAKER	MECH POST FEED	-1 AND SPARE PARTS
7-1529005-7	A	-	-	-	SPARE PARTS KIT

CRIMP DATA AMP TERMINAL AMP CRIMP SPECS

TERMINAL NAME: .250" SERIES FASTIN-FASTON REC, AMPLIVAR

CRIMP	SIZE	TYPE	RANGE
WIRE	2.54 [.100 IN]	F	0.90-1.60Ø
INSUL	4.06 [.160 IN]	OV	2.20-3.30 [.087-.130 IN]

WIRE STRIP LENGTH 6.60 [.260 IN]

APPL INSTRUCTION 408-8323 & 408-8490

TERMINAL - - FEED
APPL SPEC NONE - 21.46 [.845 IN]

TERMINALS APPLIED

928793	-	-	-	-
969184	-	-	-	-
-	-	-	-	-
-	-	-	-	-
-	-	-	-	-
-	-	-	-	-
-	-	-	-	-
-	-	-	-	-

WIRE SIZE CMA	CRIMP HEIGHT *	REF SETTING
4360	1.83 ±0.05 [.072 ±.002 IN]	B 4
3810	1.75 ±0.05 [.069 ±.002 IN]	C 2
3215	1.67 ±0.05 [.066 ±.002 IN]	C 7
2665	1.58 ±0.05 [.062 ±.002 IN]	D 3
2390	1.54 ±0.05 [.061 ±.002 IN]	D 5
2150	1.51 ±0.05 [.059 ±.002 IN]	D 8
1935	1.48 ±0.05 [.058 ±.002 IN]	E 0
1640	1.44 ±0.05 [.057 ±.002 IN]	E 3
1520	1.42 ±0.05 [.056 ±.002 IN]	E 4
-	-	-
-	-	-
-	-	-
-	-	-
-	-	-
-	-	-

SET UP GAGE	LAYOUT
458638-3	L1529005

1. RECOMMENDED SPARE PARTS.
2. GREASE RAM, CAM, CAM FOLLOWER AND FEED ROD LIGHTLY.
3. LUBRICATE DAILY PER THE APPLICATOR INSTRUCTION SHEET SUPPLIED WITH THE APPLICATOR.
4. CUT TO LENGTH AT ASSEMBLY

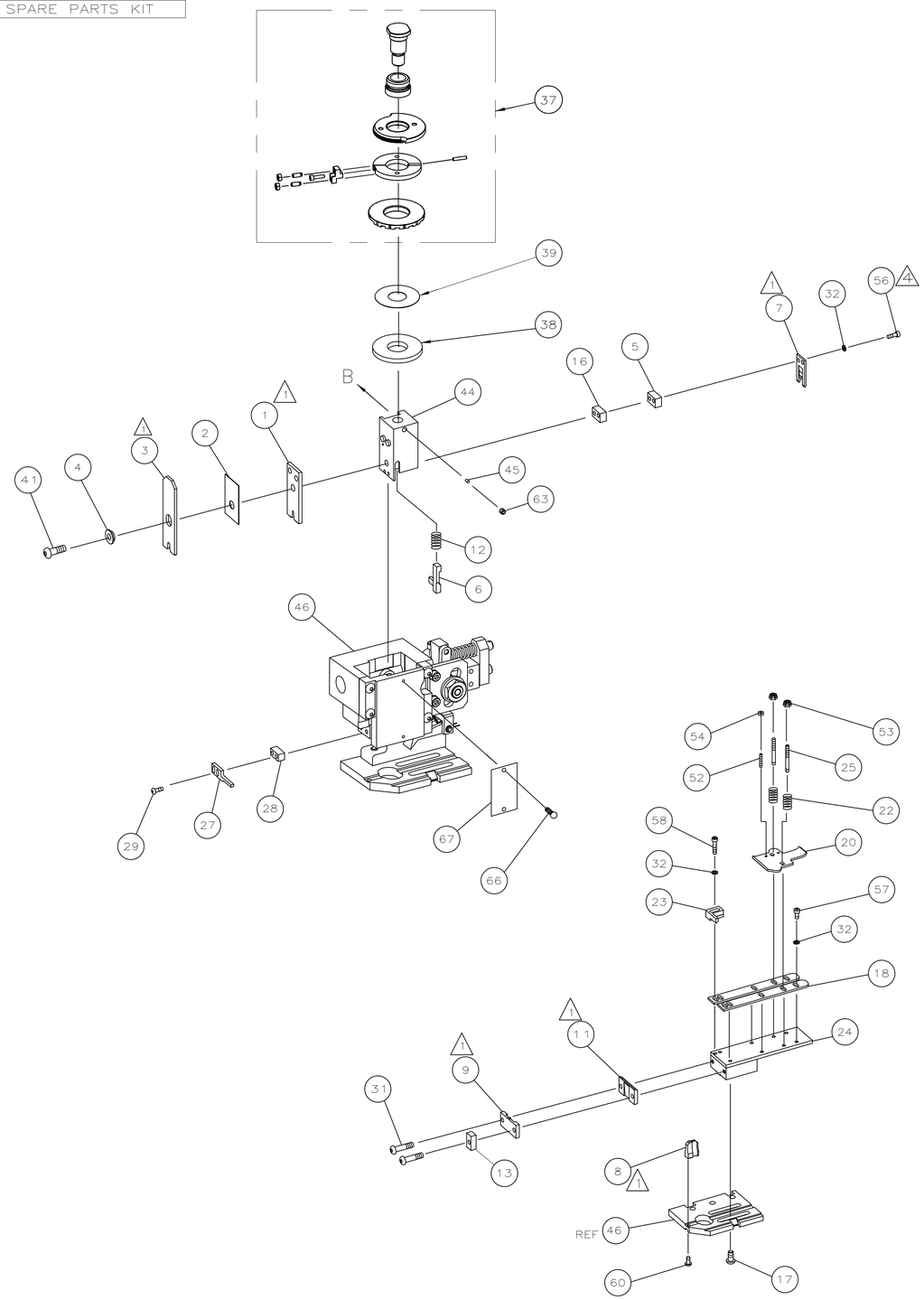

QTY REQD PER ASSY			PART NO	DESCRIPTION	ITEM NO
					73
-	1	1	1529005	PRINT, APPLICATOR LOG SHEET	72
-	1	1	1338705-4	DOCUMENTATION PACKAGE	71
					70
					69
					68
-	1	1	461264-5	PLATE, IDENTIFICATION	67
-	2	2	21017-2	SCR,DRIVE(#2X.19)ID PLATE	66
					65
					64
-	1	1	3-18031-0	SCR,SKT SET(M6X6)RAM	63
					62
					61
-	1	1	18024-7	SCR,BHC(M4X10)ANVIL	60
					59
-	2	2	1-18023-3	SCR,SHC(M4X16)HOLD DOWN	58
-	5	5	18023-9	SCR,SHC(M4X6)STRIP GUIDE	57
4 -	2	2	9-18023-6	SCR,SHC(M4X14)SLUG BLADE	56
					55
-	2	2	18029-1	NUT,HEX(M3)DRAG	54
-	2	2	986965-1	NUT,HEX SL(M4)DRAG STUD	53
-	2	2	2-18032-2	SCR,SKT SET(M3X10)DRAG	52
					51
					50
-	1	1	18024-3	SCR,BHC(M3X10)CAM	49
					48
-	1	1	1338676-1	CAM, POST-FEED 30 & 40 mm ST	47
-	1	1	1338662-1	APPLICATOR, BASIC (SUBASSY)	46
-	1	1	690191-1	PLUG, NYLON	45
-	1	1	1320998-1	RAM	44
					43
					42
-	1	1	2-18024-6	SCREW,BHC(M8X25)CRIMPER	41
					40
-	1	1	690125-1	SHIM SUBASSY	39
-	1	1	469367-9	SPACER, FINE ADJUST	38
-	1	1	879103-3	FINE ADJUST HEAD SUBASSY	37
					36
					35
					34
					33
-	9	9	18025-2	WASHER,LOCK(M4)SHEAR BL	32
-	2	2	1-18024-0	SCR,BHC(M4X20)SHEAR PL	31
					30
-	2	2	18024-8	SCR,BHC(M4X12)STRIPPER	29
-	1	1	3-690451-2	SPACER, STRIPPER	28
-	1	1	240639-1	STRIPPER	27
					26
-	2	2	1320906-1	DRAG, STUD	25
-	1	1	1320995-3	STRIP GUIDE	24
-	1	1	240825-4	PLATE, STRIP HOLD DOWN	23
-	2	2	4-22281-1	SPRING, DRAG	22
					21
-	1	1	1338665-1	DRAG, STOCK	20
					19
-	2	2	1338663-5	GUIDE, LOWER STRIP	18
-	4	4	1-18024-8	SCR,BHC(M6X12)STRIP GD PL	17
-	1	1	1338708-1	SPACER, SLUG BLADE	16
					15
					14
-	1	1	690481-7	SPACER, HOLD DOWN	13
-	1	1	23846-1	SPRING, HOLD DOWN	12
1 -	1	1	240833-4	PLATE, REAR SHEAR	11
					10
-	1	1	690495-4	PLATE, FRONT SHEAR	9
1 1	2	1	1333218-1	ANVIL	8
-	1	1	690474-3	BLADE, SLUG	7
-	1	1	2-455892-4	HOLD DOWN, TERMINAL	6
-	1	1	240641-4	SPACER, SLUG BLADE	5
-	1	1	238009-1	SPACER, BLOCK CRIMPER	4
1 1	2	1	318903-3	CRIMPER, INSULATION	3
-	1	1	455888-4	SPACER, CRIMPER	2
1 1	2	1	456407-7	CRIMPER, WIRE	1
-77	-71	-1	PART NO	DESCRIPTION	ITEM NO

PARTS LIST

VIEW B ROTATED 180°

POST-FEED 40 mm STROKE

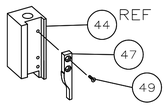

LEADMAKER OR BENCH G

POST-FEED 30 mm STROKE

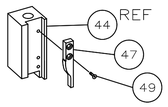

K TERMINATOR BENCH MACHINE

* WARNING:
ON INSTALLATION, SET WIRE DISC TO LARGEST WIRE SIZE SETTING. USE OF SETTINGS BELOW MIN REQ'D CRIMP HEIGHT SETTING WILL CAUSE DAMAGE TO CRIMP TOOLING.

AMP 4805 REV 31MAR2000

THIS DRAWING IS A CONTROLLED DOCUMENT.

DIMENSIONS: INCHES

TOLERANCES UNLESS OTHERWISE SPECIFIED:
0 PLC ± -
1 PLC ± -
2 PLC ± -
3 PLC ± -
4 PLC ± -
ANGLES ± -

MATERIAL -
FINISH -

DWN M.CLIFFORD 02MAY01
CHK -
APVD F.RACKHURST 02MAY01
PRODUCT SPEC -
APPLICATION SPEC -
WEIGHT -

Tyco Electronics
Tyco Electronics Corporation
Harrisburg, PA 17105-3608

NAME FINE ADJ END FD HD-I APPL

SIZE	CAGE CODE	DRAWING NO	RESTRICTED TO
A1	00779	C-1529005	-

CUSTOMER DRAWING

SCALE	SHEET	REV
-	1 OF 1	D

15NOV2007 9:18am