THIS DRAWING IS UNPUBLISHED. RELEASED FOR PUBLICATION -.- .
© COPYRIGHT - BY TYCO ELECTRONICS CORPORATION. ALL RIGHTS RESERVED.

LOC	DIST
GP	00

REVISIONS

P	LTR	DESCRIPTION	DATE	DWN	APVD
	B	REVISED PER ECO-08-007327	09APR08	BM	WM
	B1	REVISED PER ECO-10-000444	19JAN10	KK	HMR

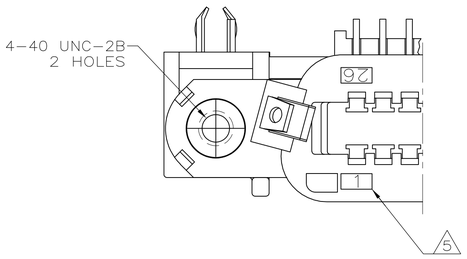

VIEW A-A

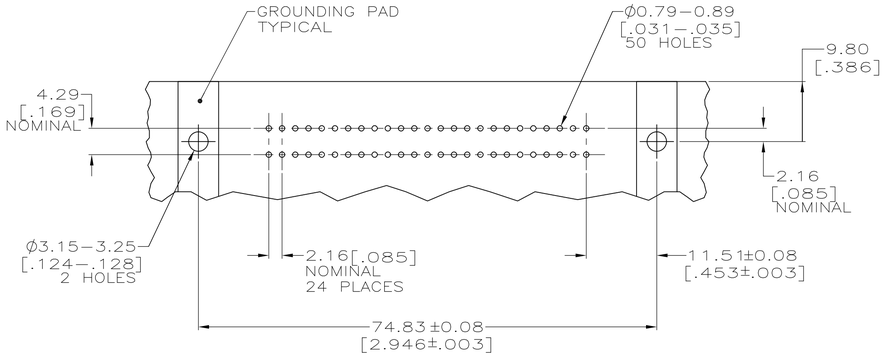

SUGGESTED PRINTED CIRCUIT BOARD
MOUNTING DIMENSIONS
SCALE 2:1

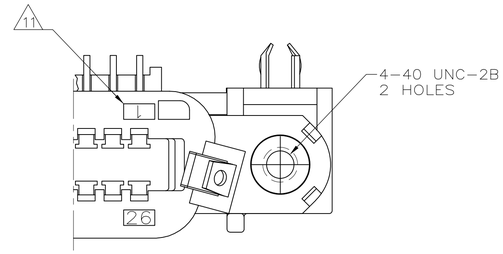

VIEW C-C

1. MATERIAL:
HOUSING, SUPPORT PLATE & ADAPTER COMB - POLYESTER, BLACK.
LATCH - ZINC PLATED CARBON STEEL.
INSERT - BRASS.
TERMINALS - HIGH STRENGTH COPPER ALLOY PLATED WITH EITHER 0.76μm [.000030] MIN GOLD PLATE OR GOLD FLASH OVER PALLADIUM NICKEL PLATE, 0.76μm [.000030] MIN TOTAL ON MATING SURFACE. 3.05μm [.000120] MIN TIN PLATE ON TAILS. ALL OVER 1.27μm [.000050] MIN NICKEL UNDERPLATE OVER ENTIRE TERMINAL.
BOARD LOCK - TIN PLATED CARBON STEEL.

2. THE CONTACT SURFACES OF THE TERMINALS ARE COATED WITH LUBRICANT.

3. CENTER-TO-CENTER SPACING OF TERMINALS IS 2.16 [.085] NOMINAL.

4. ALL DIMENSIONS SHOWN ARE MAXIMUM UNLESS OTHERWISE SPECIFIED.

5. TERMINAL 1 LOCATED IN THIS ROW FOR STANDARD ORIENTATION. SEE VIEW A-A.

6. BOARD LOCK RETAINS CONNECTOR IN 1.58 [.062] THICK PC BOARD WITHOUT ADDITIONAL HARDWARE.

7. BOARD LOCK LOCATES CONNECTOR FLUSH WITH TOP OF PC BOARD AND SPRING LOCKS BENEATH.

8. CYLINDRICAL SHAPE OFFERS 180° OF SOLERING SURFACE.

9. SURFACE AREA BELOW PC BOARD SHALL PASS SOLDERABILITY REQUIREMENTS IN ACCORDANCE WITH AMP SPEC 109-11-2. DISCOLORATION, SCRATCHES, SPOTS AND OTHER COSMETIC DEFICIENCIES TYPICAL OF BARREL PLATING PROCESSES ARE ACCEPTABLE PROVIDING PARTS PASS 24 HOUR EXPOSURE AT 95% RH AT 40°C WITHOUT EVIDENCE OF CORROSION.

10. BRACKET SUPPLIED BY CUSTOMER. (OPTIONAL)

11. TERMINAL 1 LOCATED IN THIS ROW FOR REVERSE ORIENTATION. SEE VIEW C-C.

12. ONE LATCH ONLY, LOCATED AT CIRCUIT 1/26 END, P/N 6116794-5 AND 6116794-6.

13. OBSOLETE PARTS: OBSOLETE CIS STREAMLINING PER D.RENAUD/D.SINISI

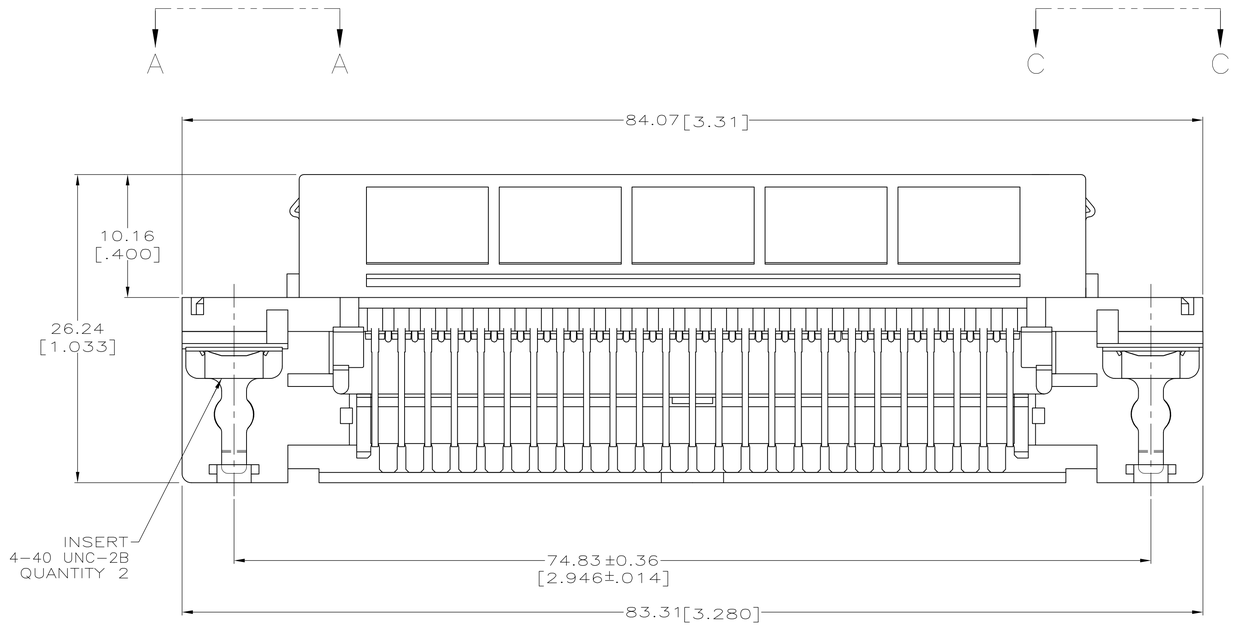

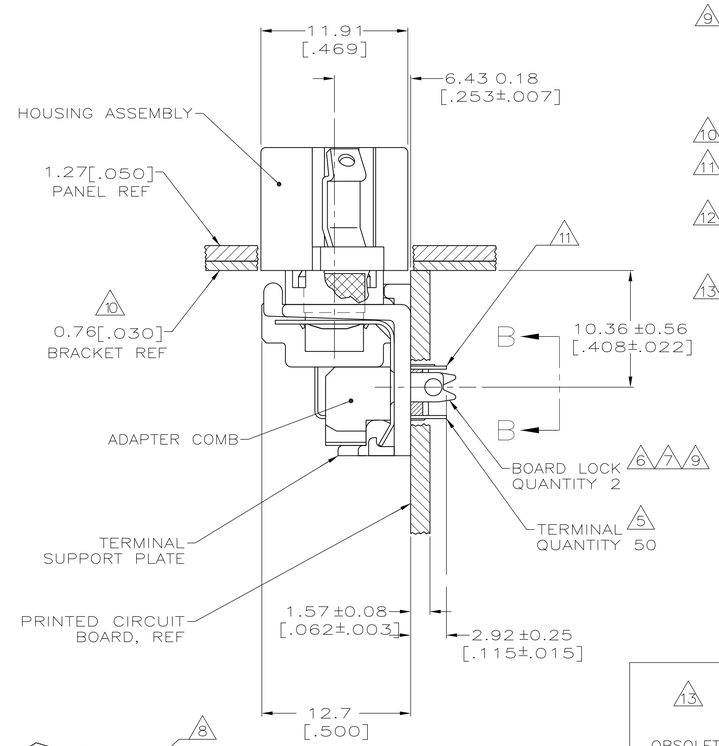

13 OBSOLETE	REVERSE, SEE VIEW C-C 11	12	~~6116794-6~~
	STANDARD, SEE VIEW A-A 5	12	~~6116794-5~~
	REVERSE, SEE VIEW C-C 11	NO LATCHES	~~6116794-4~~
	REVERSE, SEE VIEW C-C 11	AS SHOWN	6116794-3
13 OBSOLETE	STANDARD, SEE VIEW A-A 5	NO LATCHES	~~6116794-2~~
	STANDARD, SEE VIEW A-A 5	AS SHOWN	6116794-1
	ORIENTATION	DESCRIPTION	PART NUMBER

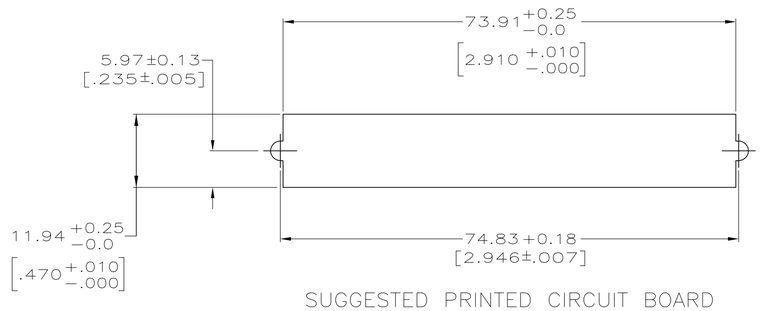

SUGGESTED PRINTED CIRCUIT BOARD
MOUNTING DIMENSIONS
SCALE 2:1

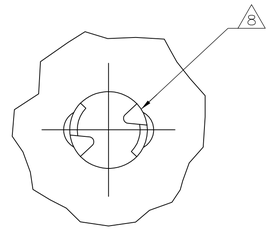

VIEW B-B
SCALE 8:1

THIS DRAWING IS A CONTROLLED DOCUMENT.

DIMENSIONS: mm [INCHES]

TOLERANCES UNLESS OTHERWISE SPECIFIED:
0 PLC ± -
1 PLC ± -
2 PLC ± -
3 PLC ± -
4 PLC ± -
ANGLES ± -

MATERIAL 1 | FINISH 1

DWN B. MCMASTER 01SEP05
CHK W. MILLHIMES 01SEP05
APVD W. MILLHIMES 01SEP05

PRODUCT SPEC —
APPLICATION SPEC —
WEIGHT —

CUSTOMER DRAWING

Tyco Electronics — Tyco Electronics Corporation, Harrisburg, PA 17105-3608

NAME: RECEPTACLE ASSEMBLY, LOW PROFILE, RIGHT ANGLE, 50 POSITION, BOARD LOCK, INTEGRAL LOCKING LATCH, CHAMP

SIZE	CAGE CODE	DRAWING NO	RESTRICTED TO
A1	00779	C-6116794	—

SCALE 4:1 | SHEET 1 OF 1 | REV B1