UNIT:mm

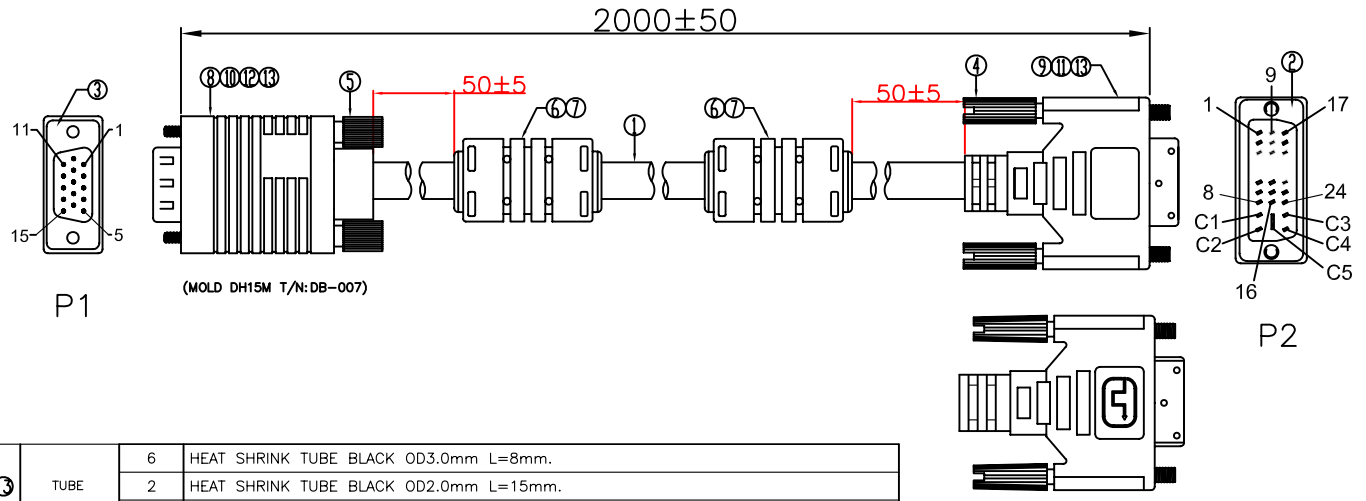

NO.	NAME	Q'TY	SPECIFICATION
⑬	TUBE	6	HEAT SHRINK TUBE BLACK OD3.0mm L=8mm.
		2	HEAT SHRINK TUBE BLACK OD2.0mm L=15mm.
		2	HEAT SHRINK TUBE BLACK OD1.0mm L=25mm.
⑫	COPPER FOIL	1	DOUBLE-SIDED CONDUCTIVE COPPER FOIL W25mm L=60mm.
⑪	COPPER FOIL	1	DOUBLE-SIDED CONDUCTIVE COPPER FOIL W30mm*L75mm
⑩	IN JACKET	10g	INNER MOID:CLEAR LDPE
⑨	IN JACKET	4g	CLEAR PE(NM-15)
	OUT JACKET	15g	WHITE(EC-005/W-18#) PVC 50P(WM-17)
⑧	OUT JACKET	30g	OUTER MOLD:45P PVC BLUE(PT:661C/BE-54#).
⑦	OUT JACKET	20g	BLACK PVC 45P (CH-002)
⑥	FERRITE	2	Core:RH17.5*10.6*28.5mm
⑤	SCREW	2	SCREW:HD40.5 #4-40UNC PLATED NI MOLD:BLUE(PT:661C/BE-54#).ABS
④	SCREW	2	SCREW #4*40UNS ø2.8*L32mm NICKEL MOLD WHITE(EC-005/W-18#) ABS
③	CONN	1	HD15P MALE INSULATION BLUE.SHELL NICKEL,PIN GOLD FLASH.
②	CONN	1	DVI(18+5) MALE INSULATION BLACK.SHELL NICKEL,PIN GOLD FLASH.
①	CABLE	1	UL20276 [30AWG*3Coax+28AWG*7C]+AL/MY+D.W+BD+JACKET:BLACK 雾面 OD:7.0±0.15mm L=2000+50/-0mm.

Electronic Test:
1.100% Test,(Open,Short,Miss Wire)
2.Contact Resistance:2 ohm max.
3.Insulation Resistance:10M ohm min.
4.Hi-Pot:300V DC/10ms
5.BENDING TEST:ANGLE 90°,BENDING 2~3 TIMES UP AND DOWN.

CnC Tech, LLC
Industrial Cable and Connector Technology

DRAWED BY	LYNDON	DARWING NO.	VG/LJQ-094-018
CHECKED BY		CUSTOMER	CNC
APPROVAL BY		ITEM NO.	751-20010-00200
DECIDE BY		DATE	2017-11-17
VERSIONS/EDITEON	A/0	PROJECTION	

UNIT:mm

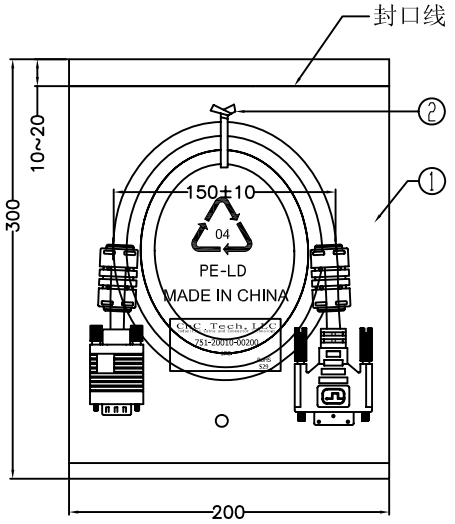

PIN ASSIGNMENT

P1		P2	COLOR
13		C4	GREEN
1	Red	C1	
2	Green	C2	
3	Blue	C3	
6.7.8		C5	SPIRAL
5.10		15	BLACK
9		14.16	BROWN
14		8	RED
12		7	ORANGE
15		6	YELLOW
SHELL		SHELL	D.W

NOTE:
1.小PE袋/大PE袋对应料号.包袋数量及时间印刷样式:

CnC Tech, LLC
Industrial Cable and Connector Technology
751-20010-00200 — 印客人产品料号
10 PCS. — 印对应的装袋数量
RoHS
529 — 表示52周09年(按每次产品生产周期印)

2.外箱两个侧唛ITEM NO后面各贴一个35*22mm ROHS标签。

NO.	NAME	Q'TY	SPECIFICATION
③	PE BAG	1/10	CLEAR SIZE:360*380mm T=0.05mm PRINT BLACK"MADE IN CHINA"+"10PC"
②	TIE	1	TIE BLACK L=120mm.
①	PE BAG	1	CLEAR SIZE:200*300mm T=0.05mm PRINT BLACK"MADE IN CHINA"+"1PC"

CnC Tech, LLC
Industrial Cable and Connector Technology

DRAWED BY	ZHONGHS	DARWING NO.	VG/LJQ-094-018
CHECKED BY		CUSTOMER	CNC
APPROVAL BY		ITEM NO.	751-20010-00200
DECIDE BY		DATE	2017-11-17
VERSIONS/EDITEON	A/0	PROJECTION	